MartinezEd
CONFIDENTIAL

TECHNICAL MANUAL

AVIATION UNIT AND INTERMEDIATE MAINTENANCE
REPAIR PARTS AND SPECIAL TOOLS LIST
(INCLUDING DEPOT MAINTENANCE REPAIR PARTS AND SPECIAL TOOLS)

TURBINE AIRCRAFT ENGINES
MODEL T53–L–13B
2840–00–134–4803
AND
MODEL T53–L–703
2840–00–621–1860

* This manual supersedes TM 55–2840–229–23P/NAVAIR 02B–15AC–4/T.O. 2J–T53–14, dated 9 December 1981 and TM 55–2840–247–23P, dated 17 June 1980, including all changes.

DISTRIBUTION STATEMENT A: Approved for public release; distribution is unlimited.

HEADQUARTERS, DEPARTMENT OF THE ARMY
15 SEPTEMBER 1995

CHANGE

NO. 5

HEADQUARTERS
DEPARTMENT OF THE ARMY
WASHINGTON. D.C., 23 JUNE 2000

TECHNICAL MANUAL

AVIATION UNIT AND INTERMEDIATE MAINTENANCE REPAIR PARTS AND SPECIAL TOOLS LIST (INCLUDING DEPOT MAINTENANCE REPAIR PARTS AND SPECIAL TOOLS)

TURBINE AIRCRAFT ENGINES
MODEL T53–L–13B
2840–00–134–4803
AND
MODEL T53–L–703
2840–00–621–1860

DISTRIBUTION STATEMENT A: Approved for public release; distribution is unlimited.

TM 1–2840–260–23P, 15 September 1995, is changed as follows:

1. Remove and insert pages as indicated below. New or changed text material is indicated by a vertical bar in the margin. An illustration change is indicated by a miniature pointing hand.

Remove Pages	Insert Pages
A and B	A and B
iii and iv	iii and iv
39-1 and Figure 40	39-1 and Figure 40
40-1 and Figure 41	40-1 and Figure 40A
—	40A-1 and Figure 41
41-1 and Figure 42	41-1 and Figure 41A
—	41A-1 and Figure 42
42-1 and Figure 43	42-1 and Figure 43
43-1, 43-2, and Figure 44	43-1 and Figure 44
44-1 and Figure 45	44-1 and Figure 45
74-1 and Figure 75	74-1 and Figure 74A
—	74A-1 and Figure 74B
—	74B-1 and Figure 75
I-1 thru I-39/(I-40 blank)	I-1 thru I-34
Cover	Cover

2. Retain this sheet in front of manual for reference purposes.

By Order of the Secretary of the Army:

Official:

ERIC K. SHINSEKI
General, United States Army
Chief of Staff

JOEL B. HUDSON
Administrative Assistant to the
Secretary of the Army
0013907

DISTRIBUTION:
To be distributed in accordance with Initial Distribution No. (IDN) 313503, requirements for TM 1-2840-260-23P.

U R G E N T

TM 1-2840-260-23P
C4

CHANGE

NO. 4

HEADQUARTERS
DEPARTMENT OF THE ARMY
WASHINGTON, D.C., 16 August 1999

TECHNICAL MANUAL

AVIATION UNIT AND INTERMEDIATE MAINTENANCE
REPAIR PARTS AND SPECIAL TOOLS LIST
(INCLUDING DEPOT MAINTENANCE REPAIR PARTS AND SPECIAL TOOLS)

TURBINE AIRCRAFT ENGINES
MODEL T53-L-13B
2840-00-134-4803
AND
MODEL T53-L-703
2840-00-621-1860

DISTRIBUTION STATEMENT A: Approved for public release; distribution is unlimited.

TM 1-2840-260-23P, 15 September 1995, is changed as follows:

1. Remove and insert pages as indicated below. New or changed text material is indicated by vertical bar in the margin. An illustration change is indicated by a miniature pointing hand.

Remove Pages	Insert Pages
A and B	A and B
43-1 and 43-2	43-1 and 43-2
60-1 and Figure 61	60-1 and Figure 61
61-1 and Figure 62	61-1 and Figure 62
I-39/(I-40 blank)	I-39/(I-40 blank)

2. Retain this sheet in front of manual for reference purposes.

By Order of the Secretary of the Army:

ERIC K. SHINSEKI
General, United States Army
Chief of Staff

Official:

JOEL B. HUDSON
Administrative Assistant to the
Secretary of the Army
05862

DISTRIBUTION:

To be distributed in accordance with Initial Distribution Number (IDN) 313503, requirements for TM 1-2840-260-23P.

MartinezEd
CONFIDENTIAL

URGENT

TM 1-2840-260-23P
C3

CHANGE

NO. 3

HEADQUARTERS
DEPARTMENT OF THE ARMY
WASHINGTON, D.C., 02 April 1999

TECHNICAL MANUAL

AVIATION UNIT AND INTERMEDIATE MAINTENANCE
REPAIR PARTS AND SPECIAL TOOLS LIST
(INCLUDING DEPOT MAINTENANCE REPAIR PARTS AND SPECIAL TOOLS)

TURBINE AIRCRAFT ENGINES
MODEL T53-L-13B
2840-00-134-4803
AND
MODEL T53-L-703
2840-00-621-1860

DISTRIBUTION STATEMENT A: Approved for public release; distribution is unlimited.

TM 1-2840-260-23P, 15 September 1995, is changed as follows:

1. Remove and insert pages as indicated below. Insert the List of Effective Pages (pages A and B) immediately preceding the Table of Contents (pages i through iv). New or changed text material is indicated by vertical bar in the margin. An illustration change is indicated by a miniature pointing hand.

Remove Pages	Insert Pages
———	A and B
42-1 and Figure 43	42-1 and Figure 43
43-1 and 43-2	43-1 and 43-2
I-3 through I-6	I-3 through I-6
I-11 and I-12	I-11 and I-12
I-17 and I-18	I-17 and I-18
I-27 and 1-28	I-27 and I-28

2. Retain this sheet in front of manual for reference purposes.

MartinezEd
CONFIDENTIAL

By Order of the Secretary of the Army:

DENNIS J. REIMER
General, United States Army
Chief of Staff

Official:

JOEL B. HUDSON
Administrative Assistant to the
Secretary of the Army
05715

DISTRIBUTION:
To be distributed in accordance with Initial Distribution Number (IDN) 313503, requirements for TM 1-2840-260-23P.

URGENT

TM 1-2840-260-23P
C2

CHANGE

NO. 2

HEADQUARTERS
DEPARTMENT OF THE ARMY
WASHINGTON, D.C., 28 January 1999

TECHNICAL MANUAL

AVIATION UNIT AND INTERMEDIATE MAINTENANCE
REPAIR PARTS AND SPECIAL TOOLS LIST
(INCLUDING DEPOT MAINTENANCE REPAIR PARTS AND SPECIAL TOOLS)

TURBINE AIRCRAFT ENGINES
MODEL T53-L-13B
2840-00-134-4803
AND
MODEL T53-L-703
2840-00-621-1860

DISTRIBUTION STATEMENT A: Approved for public release; distribution is unlimited.

TM 1-2840-260-23P, 15 September 1995, is changed as follows:

1. Remove and insert pages as indicated below. New or changed text material is indicated by vertical bar in the margin. An illustration change is indicated by a miniature pointing hand.

Remove Pages	Insert Pages
18-1 and Figure 19	18-1 and Figure 1
39-1 and Figure 40	39-1 and Figure 40
42-1 and Figure 43	42-1 and Figure 43
43-1 and 43-2	43-1 and 43-2
I-37/(I-38 blank)	I-37 and I-38

2. Retain this sheet in front of manual for reference purposes.

By Order of the Secretary of the Army:

DENNIS J. REIMER
General, United States Army
Chief of Staff

Official:

JOEL B. HUDSON
Administrative Assistant to the
Secretary of the Army
05293

DISTRIBUTION:
To be distributed in accordance with Initial Distribution Number (IDN) 313503, requirements for TM 1-2840-260-23P.

URGENT

TM 1-2840-260-23P
C1

CHANGE

NO. 1

HEADQUARTERS
DEPARTMENT OF THE ARMY
WASHINGTON, D.C., 22 January 1998

AVIATION UNIT AND INTERMEDIATE MAINTENANCE
REPAIR PARTS AND SPECIAL TOOLS LIST
(INCLUDING DEPOT MAINTENANCE REPAIR PARTS AND SPECIAL TOOLS)

TURBINE AIRCRAFT ENGINES
MODEL T53-L-13B
2840-00-134-4803
AND
MODEL T53-L-703
2840-00-621-1860

DISTRIBUTION STATEMENT A: Approved for public release; distribution is unlimited.

TM 1-2840-260-23P, 15 September 1995, is changed as follows:

1. Remove and insert pages as indicated below. New or changed text material is indicated by vertical bar in the margin. An illustration change is indicated by a miniature pointing hand.

Remove Pages	Insert Pages
i and ii	i and ii
2-1 and Figure 3	2-1 and Figure 3
4-1 and Figure 5	4-1 and Figure 5
31-1 and Figure 32	31-1 and Figure 32
47-1 and Figure 48	47-1 and Figure 46
51-1 and Figure 52	51-1 and Figure 52
I-21 and I-22	I-21 and I-22
----------	I-37/(I-38 Blank)

2. Retain this sheet in front of manual for reference purposes.

By Order of the Secretary of the Army:

DENNIS J. REIMER
General, United States Army
Chief of Staff

Official:

JOEL B. HUDSON
Administrative Assistant to the
Secretary of the Army
03860

DISTRIBUTION:

To be distributed in accordance with Initial Distribution Number (IDN) 3503, requirements for TM 1-2840-260-23P.

LIST OF EFFECTIVE PAGES

Insert latest changed pages. Dispose of superseded pages in accordance with regulations.

NOTE: On a changed page, the portion of text affected by the latest change is indicated by a vertical line in the outer margin of the page. Changes to illustrations are indicated by a miniature pointing hand.

DATES OF ISSUE FOR ORIGINAL AND CHANGED PAGES ARE AS FOLLOWS:

Original	0	15 September 1995	Change	3	02 April 1999
Change	1	22 January 1998	Change	4	16 August 1999
Change	2	28 January 1999	Change	5	23 June 2000

TOTAL NUMBER OF PAGES IN THIS PUBLICATION IS 294, CONSISTING OF THE FOLLOWING:

Page Number	* Change Number	Page Number	* Change Number	Page Number	* Change Number
Cover	5	14–1 – 14–2	0	Figure 31	0
A – B	5	Figure 15	0	31–1	1
i	1	15–1	0	Figure 32	0
ii	0	Figure 16	0	32–1	0
iii – iv	5	16–1	0	Figure 33	0
1 – 9	0	Figure 17	0	33–1	0
Figure 1	0	17–1 – 17–2	0	Figure 34	0
1–1	0	Figure 18	0	34–1	0
Figure 2	0	18–1	2	Figure 35	0
2–1	1	Figure 19	0	35–1	0
Figure 3	0	19–1	0	Figure 36	0
3–1	0	Figure 20	0	36–1	0
Figure 4	0	20–1 – 20–2	0	Figure 37	0
4–1	1	Figure 21	0	37–1	0
Figure 5	0	21–1	0	Figure 38	0
5–1	0	Figure 22	0	38–1	0
Figure 6	0	22–1 – 22–2	0	Figure 39	0
6–1 – 6–3	0	Figure 23	0	39–1	5
Figure 7	0	23–1	0	Figure 40	5
7–1	0	Figure 24	0	40–1	5
Figure 8	0	24–1	0	Figure 40A	5
8–1	0	Figure 25	0	40A–1	5
Figure 9	0	25–1	0	Figure 41	5
9–1	0	Figure 26	0	41–1	5
Figure 10	0	26–1 – 26–2	0	Figure 41A	5
10–1	0	Figure 27	0	41A–1	5
Figure 11	0	27–1	0	Figure 42	0
11–1 – 11–4	0	Figure 28	0	42–1	5
Figure 12	0	28–1	0	Figure 43	5
12–1	0	Figure 29	0	43–1	5
Figure 13	0	29–1	0	Figure 44	5
13–1	0	Figure 30	0	44–1	5
Figure 14	0	30–1	0	Figure 45	0

*A zero in this column indicates an original page.

Page Number	* Change Number
45–1	0
Figure 46	0
46–1	0
Figure 47	0
47–1	1
Figure 48	0
48–1	0
Figure 49	0
49–1	0
Figure 50	0
50–1	0
Figure 51	0
51–1	1
Figure 52	0
52–1	0
Figure 53	0
53–1	0
Figure 54	0
54–1	0
Figure 55	0
55–1	0
Figure 56	0
56–1	0
Figure 57	0
57–1	0
Figure 58	0
58–1	0
Figure 59	0
59–1	0
Figure 60	0
60–1	0
Figure 61	4
61–1	4
Figure 62	0
62–1	0
Figure 63	0
63–1	0
Figure 64	0
64–1	0
Figure 65	0
65–1	0
Figure 66	0
66–1	0
Figure 67	0
67–1	0
Figure 68	0
68–1	0
Figure 69	0
69–1	0
Figure 70	0
70–1	0
Figure 71	0
71–1	0
Figure 72	0
72–1	0
Figure 73	0
73–1	0
Figure 74	0
74–1	0
Figure 74A	5
74A–1	5
Figure 74B	5
74B–1	5
Figure 75	0
75–1	0
Figure 76	0
76–1	0
Figure 77	0
77–1	0
Figure 78	0
78–1	0
Figure 79	0
79–1	0
Figure 80	0
80–1	0
Figure 81	0
81–1	0
Figure 82	0
82–1	0
Figure 83	0
83–1	0
Figure 84	0
84–1	0
Figure 85	0
85–1	0
Figure 86	0
86–1	0
Figure 87	0
87–1	0
Figure 88	0
88–1	0
Figure 89	0
89–1	0
Figure 90	0
90–1	0
Figure 91	0
91–1	0
Figure 92	0
92–1	0
Figure 93	0
93–1	0
Figure 94	0
94–1	0
Figure 95	0
95–1	0
Figure 96	0
96–1	0
Figure 97	0
97–1	0
Figure 98	0
98–1	0
Figure 99	0
99–1	0
Figure 100	0
100–1	0
Figure 101	0
101–1	0
Figure 102	0
102–1	0
Figure 103	0
103–1	0
Figure 104	0
104–1	0
Figure 105	0
105–1	0
Figure 106	0
106–1	0
Figure 107	0
107–1	0
Figure 108	0
108–1	0
Figure 109	0
109–1	0
Figure 110	0
110–1	0
Figure 111	0
111–1	0
Figure 112	0
112–1	0
I–1 – I–34	5

TECHNICAL MANUAL

NO. 1-2840-260-23P

HEADQUARTERS, DEPARTMENT OF THE ARMY,
AND THE AIR FORCE
WASHINGTON. D.C., 15 September 1995

TECHNICALMANUAL

AVIATION UNIT AND INTERMEDIATE MAINTENANCE REPAIR PARTS AND SPECIALTOOLS LIST (INCLUDING DEPOT MAINTENANCE REPAIR PARTS AND SPECIAL TOOLS)

TURBINE AIR CRAFT ENGINES

MODEL T53-L-13B
2840-00-134-4803
AND
MODEL T53-L-703
2840-00-621-1860

Current as of 31 October 1994

REPORTING OF ERRORS AND RECOMMENDING IMPROVEMENTS

You can help improve this manual. If you find any mistakes or if you know of any way to improve the procedures, please let us know. Mail your letter. DA Form 2028 (Recommended Changes to Publications and Blank Forms), or DA Form 2028-2 located in the back of this manual direct to: Commander. U.S. Army Aviation and Missile Command, ATTN: AMSAM-MMC-LS-LP, Redstone Arsenal. AL 35898-5230. A reply will be furnished to you. You may also send in your comments electronically to our e-mail address: Is-lp@redstone.army.mil or by fax 205-842-6546/DSN 788-6546. Instructions for sending an electronic 2028 may be found at the back of this manual immediately preceding the hard copy 2028.

DISTRIBUTION STATEMENT A: Approved for public release; distribution is unlimited.

TABLE OF CONTENTS

		PAGE	ILLUS/ FIGURE
Section I.	INTRODUCTION	1	
Section II.	REPAIR PARTS LIST	1-1	
Group 04	Power Plant	1-1	
Group 0400	Engine System	1-1	
	Turbine Aircraft Engine	1-1	1
Group 0402	Compressor Section..	2-1	
	Air Bleed Hose Assemblies and Related Parts..	2-1	2

*This manual supersedes TM 55-2840-229-23P/NAVAIR 02B-15AC-4/T.O. 2J-T53-14, dated 9 December 1981, and TM 55-2840-247-23P, dated 17 June 1980, including all changes.

TABLE OF CONTENTS - CONTINUED

		Page	Illus Figure
	Anti-Icing Solenoid Valve, Regulating Tube, and Related Parts	3-1	3
	Inlet Guide Vane Actuator and Related Parts	4-1	4
	Inlet Guide Vane Actuator	5-1	5
	Compressor and Impeller Housing Assembly, Compressor Rotor Assembly, and Related Parts	6-1	6
	Compressor and Impeller Housing Assembly	7-1	7
	Case and Vane Assembly	8-1	8
	Axial Compressor Case	9-1	9
	Interstage Air Bleed Actuator	10-1	10
	Compressor Rotor Assembly (T53-L-13B)	11-1	11
	Second Turbine Rotor (T53-L-13B)	12-1	12
	First Turbine Rotor (T53-L-13B)	13-1	13
	Compressor Rotor Assembly (T53-L-703)	14-1	14
	Variable Inlet Guide Vane Assembly, Air Inlet Housing, and Related Parts	15-1	15
	Air Inlet Housing Assembly	16-1	16
	First Turbine Nozzle, Deflector Assembly, Rear Bearing Housing, and Related Parts	17-1	17
	Diffuser Housing Assembly	18-1	18
0403	Combustor Turbine Section	19-1	
	Combustor Turbine Assembly and Related Parts	19-1	19
	Fire Shield, Exhaust Diffuser Support Cone, Fuel Manifold, Exhaust Diffuser Assembly, and Related Parts	20-1	20
	Exhaust Diffuser Assembly	21-1	21
	First Power Turbine Nozzle, Turbine Rotor, Second Power Turbine Nozzle, Combustion Chamber Assembly, Power Turbine Rotor and Bearing Housing Assembly, and Related Parts	22-1	22
	First and Second Stage Gas Producer Turbine Rotor Assemblies and Related Parts	23-1	23
	Second Stage Turbine Nozzle Assembly, Cylinder Assembly, and Related Parts	24-1	24
	Combustion Chamber Assembly	25-1	25
0404	Power Turbine Section	26-1	
	Power Turbine Rotor and Bearing Housing Assembly	26-1	26
	Second Power Turbine Nozzle Assembly	27-1	27
	First Power Turbine Rotor Assembly	28-1	28
	First Power Turbine Nozzle Assembly (T53-L-13B)	29-1	29
	First Power Turbine Nozzle Assembly (T53-L-703)	30-1	30

TABLE OF CONTENTS – CONTINUED

		PAGE	ILLUS/ FIGURE
Group 0405	Accessory Gear Section	31–1	
	Accessory Drive Gearbox Assembly and Related Parts	31–1	31
	Accessory Drive Gearbox Shaft Assembly, Tachometer Flange, Fuel Control Liner, Starter Seal Housing, Accessory Pad Cover, and Related Parts	32–1	32
	Accessory Drive Gearbox Housing Assembly, Cover Assembly, Gearshaft Assemblies, and Related Parts	33–1	33
	Accessory Drive Gearbox Cover Assembly	34–1	34
	Accessory Gearbox Housing Assembly	35–1	35
	Overspeed Governor and Tachometer Drive Assembly and Related Parts	36–1	36
	Overspeed Governor and Tachometer Drive Assembly	37–1	37
	Filter Assembly Housing	38–1	38
	Output Reduction Carrier and Gear Assembly and Related Parts	39–1	39
	Output Reduction Carrier and Gear Assembly (1–030–350–18), Oil Seal Retainer, Bearing, Bearing Support Liner, Reduction Gear Housing, Torquemeter Plate Assembly, and Related Parts	40–1	40
	Output Reduction Carrier and Gear Assembly (1–030–350–18), Planetary Carrier Assembly, Gearshafts, Rear Torquemeter Plate Assembly, and Related Parts	40A–1	40A
	Output Reduction Carrier and Gear Assembly (1–030–350–19), Oil Seal Retainer, Bearing, Bearing Support Liner, Reduction Gear Housing, Torquemeter Plate Assembly, and Related Parts	41–1	41
	Output Reduction Carrier and Gear Assembly (1–030–350–19), Planetary Carrier Assembly, Gearshafts, Rear Torquemeter Plate Assembly, and Related Parts	41A–1	41A
	Accessory Drive Carrier Assembly, Power Shaft Bearing Retainer Assembly, and Related Parts	42–1	42
	Accessory Drive Carrier Assembly (1–070–220–10)	43–1	43
	Accessory Drive Carrier Assembly (1–070–210–07)	44–1	44
Group 0406	Fuel System	45–1	
	Fuel Manifold Assembly	45–1	45
	Inlet Guide Vane Actuator Fuel Hose Assemblies and Related Parts	46–1	46
	Fuel Lines, Hoses, Nozzle, Check Valve, and Related Parts	47–1	47
	Check Valve	48–1	48
	Solenoid Valve, Combustion Chamber Drain Valve, Flow Divider Valve Assembly, and Related Parts	49–1	49

TABLE OF CONTENTS – CONTINUED

		PAGE	ILLUS/ FIGURE
	Flow Divider Valve Assembly	50–1	50
	Main Fuel Control, Overspeed Governor, and Related Parts	51–1	51
	Overspeed Governor and Shipping Parts	52–1	52
	Fuel Housing Assembly Strainer, Pressure Fluid Filter, Bypass Housing, and Filter Body	53–1	53
	Fuel Housing Assembly Seal Assembly and Solenoid Valve	54–1	54
Group 0407	Electrical System	55–1	
	Special Cable Assembly, Ignition Exciter, Spark Igniters, and Related Parts	55–1	55
	Special Cable Assembly	56–1	56
	Branched Wiring Harness, Thermocouple Harness, and Related Parts	57–1	57
	Anti–Icing Solenoid Valve (26330053)	58–1	58
	Anti–Icing Solenoid Valve (1–300–194–04)	59–1	59
Group 0408	Oil System	60–1	
	Oil Lines, Hoses, and Related Parts	60–1	60
	Fluid Filter Body, Rotary (Booster) Pump Assembly, Rotary (Oil) Pump Assembly, Temperature Transmitter, and Related Parts	61–1	61
	Fluid Filter Body, Pressure Indicator, and Filtering Disk	62–1	62
	Rotary (Oil) Pump	63–1	63
Group 8100	Special Tools (Repair Parts)	64–1	
	Probe Assembly (BH7434L40)	64–1	64
	Probe Assembly (BH7434R40)	65–1	65
	Maintenance Kit (LTCT13726)	66–1	66
	Maintenance Kit (LTCT2020–01)	67–1	67
	Inlet Guide Vane Position Transmitter Assembly	68–1	68
	Bearing Adapter Set (LTCT4028)	69–1	69
	Bearing Adapter Set (LTCT4029)	70–1	70
	Housing Pressure Tester	71–1	71
	Hydraulic Press	72–1	72
	Torque Wrench	73–1	73
	Jet Ignition Test Set	74–1	74
	Gearshaft Bearing Disassembly Tool (LTCT30719–01)	74A–1	74A
	Bevel Gear/Duplex Bearing Assembly/Disassembly Kit (LTCT30741–01)	74B–1	74B
Section III.	SPECIAL TOOLS LIST	75–1	
Group 8100	Special Tools List	75–1	
	Special Tools	75–1	75 thru 112
Section IV.	CROSS–REFERENCE INDEXES	I–1	
	National Stock Number Index	I–1	
	Part Number Index	I–18	

AVIATION UNIT AND INTERMEDIATE MAINTENANCE REPAIR PARTS AND SPECIAL TOOLS LIST (INCLUDING DEPOT MAINTENANCE REPAIR PARTS AND SPECIAL TOOLS)

SECTION I
INTRODUCTION

---

1. SCOPE.

This RPSTL lists and authorize spares and repair parts, special tools, special test, measurement, and diagnostic equipment (TMDE), and other special support equipment required for performance of unit maintenance of the Engines, Turbine Aircraft T53-L-13B and T53-L-703. It authorizes the requisitioning, issue, and disposition of spares, repair parts and special tools as indicated by the source, maintenance and recoverability (SMR) codes.

2. GENERAL.

In addition to Table of Contents (TOC) and Section I (Introduction), this repair parts and special tools list is divided into the following sections.

a. Section II. Repair Parts List. A list of spares and repair parts authorized by this RPSTL for use in the performance of maintenance. This list also includes parts which must be removed for replacement of the authorized parts. Parts lists are composed of functional groups in wending numeric sequence, with the parts in each group listed in ascending figure and item number sequence. Items listed are indented when required to indicate the relationship to the next higher assembly. Repair parts for reparable special tools are also listed in SECTION II. Items listed are shown on the preceding associated illustration.

b. Section III. Special Tools List. A list of special tools, special TMDE, and special support equipment authorized by this RPSTL (as indicated by Basis of Issue (BOI) information in the DESCRIPTION AND USABLE ON CODE (UOC) column). Items listed are shown on the preceding associated illustration.

c. Section IV, Cross-Reference Indexs. There are two Cross-Reference Indexes in this RPSTL: The National jStock Number Index and the Part Number Index. The National Stock Number Index refers you to the figure and item number. The Part Number Index refers you to the figure and item number.

3. EXPLANATION OF COLUMNS (SECTIONS II AND III).

a. ITEM NO. (Column (1)). Indicates the number used to identify items called out in the illustration.

b. ~~SMR Code (Column (2))~~. The Source, Maintenance, and Recoverability (SMR) code contains supply/requisitioning information, maintenance level authorization criteria, and disposition instruction, as shown in the following breakout:

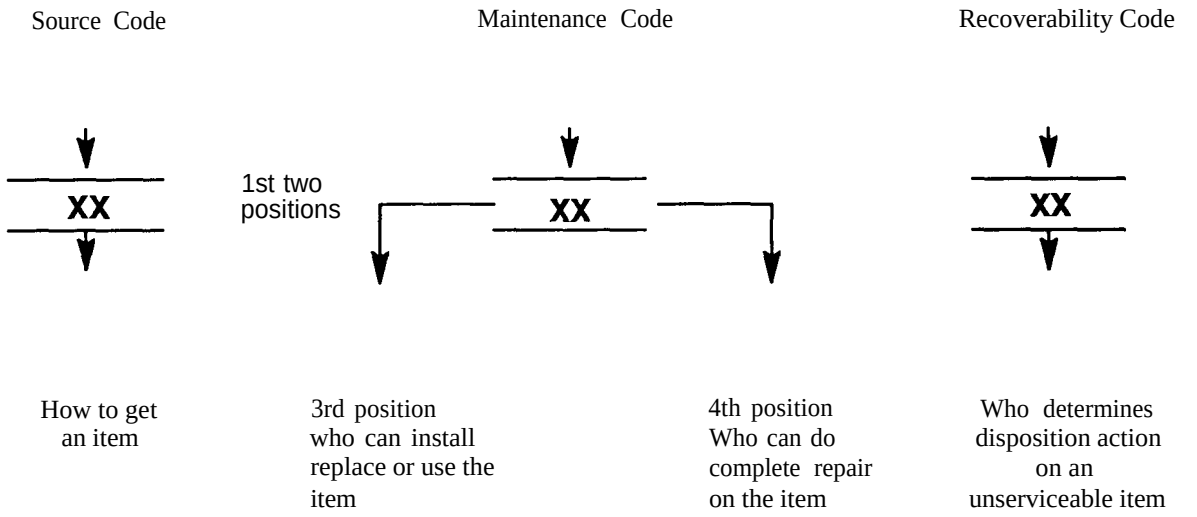

NOTE

Complete Repair: Maintenance capacity, capability, and authority to perform all corrective maintenance tasks of the "Repair" function in a use/user environment in order to restore serviceability to a failed item.

(1) Source Code. The source code tells you how to get an item needed for maintenance, repair, or overhaul of an end item equipment. Explanations of source codes follows:

Source Code	Application/Explanation
PA PB PC PD PE PF PG	Stocked items; use the applicable NSN to requisition/request items with these source codes. They are authorized to the level indicated by the code entered in the 3rd position of the SMR code. **NOTE** Items coded PC are subject to deterioration.
KD KF KB	Items with these codes are not to be requested/requisitioned individually. They are part of a kit which is authorized to the maintenance level indicated in the 3rd position of the SMR code. The complete kit must be requisitioned and applied.

MO - (Made at Unit/AVUM Level) MF - (Made at DS/AVIM Level) MH - (Made at GS Level) ML - (Made at Specialized Repair Activity (SRA) MD - (Made at Depot)	Items with these codes are not to be requisitioned/requested individually. They must be made from bulk material which is identified by the part number in the DESCRIPTION and USABLE ON CODE (UOC) column and listed in the bulk material group of the repair parts list of the RPSTL. If the item is authorized to you by the 3rd position code of the SMR code, but the source code indicates it is made at a higher level, order the item from the higher level of maintenance.
AO - (Assembled by Unit/AVUM Level) AF - (Assembled by DS/AVIM Level) AH - (Assembled by GS Level) AL - (Assembled by SRA) AD - (Assembled by Depot)	Items with these codes are not to be requested/ requisitioned individually. The parts that make up the assembled item must be requisitioned or fabricated and assembled at the level of maintenance indicated by the source code. If the 3rd position of the SMR cude authorizes you to replace the item, but the source code indicates the item is assembled at a higher level, order the item from the higher level of maintenance.

XA - Do not requisition “XA” coded item. Order the next higher assembly. (Refer to the NOTE below.)

XB - If an item is not available from salvage, order it using the CAGEC and part number.

XC - Installation drawing, diagrams, instruction sheet, field service drawing; identified manufacturer’s part number.

NOTE

Cannibalization or controlled exchange, when authorized, maybe used as a source of supply for items with the above source codes except for those sources coded “XA” or those aircraft support items restricted by requirements of AR 750-1.

XD - Items are not stocked. Order an “XD”- coded item, through normal supply channels using the CAGEC and part number given, if no NSN is available.

(2) Maintenance Code. Maintenance codes tell you the level(s) of maintenance authorized to use and repair support items. The maintenance codes are entered in the third position of the SMR code as follows:

(a) The maintenance code entered in the third position tells you the lowest maintenance level authorized to remove, replace, and use an item. The maintenance code entered in the third position will indicate authorization to the following levels of maintenance.

Maintenance Code	Application/Explanation
C -	Crew or operator maintenance done within unit/AVUM maintenance.
O -	Unit level/AVUM maintenance can remove, replace, and use the item.
F -	Direct support/AVIM maintenance can remove, replace, and use the item.
H -	General support maintenance can remove, replace, and use the item.
L -	Specialized repair activity can remove, replace, and use the item.
D -	Depot can remove. replace, and use the item.

(b) The maintenance code entered in the fourth position tells whether or not the item is to be repaired and identifies the lowest maintenance level with the capability to do complete repair (perform all authorized repair functions).

NOTE

Some limited repair may be done on an item at a lower level of maintenance, if authorized by the maintenance allocation chart and SMR codes.

Maintenance Code	Application/Explanation
O -	Unit/AVUM is the lowest level that can do complete repair of the item.
F -	Direct support/AVIM is the lowest level that can do complete repair of the item.
H -	General Support is the lowest level that can do complete repair of the item.

L - Specialized repair activity (designate the specialized repair activity) is the lowest level that can do complete repair of the item.

D - Depot is the lowest level that can do complete repair of the item.

Z - Nonreparable. No repair is authorized.

B - No repair is authorized. No parts or special tools are authorized for the maintenance of a “B” coded item. However, the item may be reconditioned by adjusting, lubricating, etc., at the user level.

(3) Recoverability Code. Recoverability codes are assigned to items to indicate the disposition action on unserviceable items. The recoverability code is shown in the fifth position of the SMR Code as follows:

Recoverability Codes	Application/Explanation
Z -	Nonreparable item. When unserviceable. condemn and dispose of the item at the level of maintenance shown in the 3d position of the SMR Code.
O -	Reparable item. When uneconomically reparable, condemn and dispose of the item at unit level.
F -	Reparable item. When uneconomically reparable, condemn and dispose of the item at the direct support level.
H -	Reparable item. When uneconomically reparable, condemn and dispose of the item at the general support level.
D -	Reparable item. When beyond lower level repair capability, return to depot. Condemnation and disposal of item not authorized below Depot level.
L -	Reparable item. Condemnation and disposal not authorized below specialized repair activity (SRA).
A -	Item requires special handling or condemnation procedures because of specific reasons (such as precious metal content, high dollar value, critical material, or hazardous material). Refer to appropriate mauuals/directives for specific instructions.

c. NSN (Column (3)). The national stock number for the item is listed in this column.

d. CAGEC (Column (4)). The commercial and government entity code (CAGEC) is a 5-digit code which is used to identify the manufacturer, distributor, or government agency/activity that supplies the item.

e. PART NUMBER (Column (5)). Indicates the primary number used by the manufacturer, (individual, company, firm, corporation, or Government activity), which controls the design and characteristic of the item by means of its engineering drawings, specifications. standards, and inspection requirements to identify an item or range of items.

NOTE

When you use an NSN to requisition an item, the item you receive may have a different part number from the number listed.

f. DESCRIPTION AND USABLE ON CODE (UOC) (Column (6). This column includes the following information:

(1) The Federal item name and, when required, a minimum description to identify the item.

(2) Part numbers of bulk materials are referenced in this column in the line entry to be manufactured/fabricated.

(3) Spare/repair parts that make up an assembled item may be referenced to an applicable figure within that line item (VALVE, CHECK SEE FIG. 48 FOR BREAKDOWN), or indented and listed immediately following the assembled item as the next line entry.

(4) The statement “END OF FIGURE” appears just below the last item description in Column (6) for a given figure in both Section II and Section III.

g. QTY (Column (7)). The QTY (quantity per figure) column indicates the quantity of the item used in the breakout shown on the illustration/figure, which is prepared for a functional group, subfunctional group, or an assembly. A “V” appearing in this column instead of a quantity indicates that the quantity is variable and may vary from application to application.

4. EXPLANATION OF INDEX FORMAT AND COLUMNS (SECTION IV).

a. National Stock Number (NSN) Index.

(1) STOCK NUMBER Column. This column lists the NSN in national item identification number (NIIN) sequence. The NIIN consists of the last nine digits of the NSN.

NSN (e.g.. 5385-01-574-1476 NIIN	When using this column to locate an item, ignore the first four digits of the NSN. Use the complete NSN (13 digits) when requisitioning items by stock number.

(2) FIG. Column. This column lists the number of the figure where the item is identified/located. The figures are in numerical order in Sections II and Section III.

(3) ITEM column. The item number identities the item associated with the figure listed in the adjacent FIG. column. This item is also identified by the NSN listed on the same line.

b. Part Number Index. Part numbers in this index are listed by part number in ascending alphanumeric sequence (vertical arrangement of letters and number combination which places the first letter or digit of each group in order A through Z, followed by the numbers 0 through 9 and each following letter or digit in like order).

(1) PART NUMBER Column. Indicates the part number assigned to the item.

(2) FIG. Column. This column lists the number of the figure where the item is identified/located in Section Il and Section III.

(3) ITEM Column. The item number is the number assigned to the item as it appears in the figure referenced in the adjacent figure number column.

5. REFERENCE DESIGNATOR INDEX. (Not applicable.)

6. SPECIAL INFORMATION.

a. Usable on Code. The usable on code appears in the lower left corner of the Description Column heading. Usable on codes are shown as "UOC:EZL, UOC:EZP, or UOC:EZL, EZP" in the Description Column (justified left) on the first line applicable item//nomenclature. Uncoded items are applicable to all models. Identification of the usable on codes used in this RPSTL are:

Code	Used On
EZL	T53-L-13B
EZP	T53-L-703

b. Fabrication Instructions. When applicable, bulk materials required to manufacture items will be listed in the bulk material functional group of this RPSTL. Part numbers for bulk materials will also be referenced in the Description Column of the line entry for the item to be manufactured/fabricated. Detailed fabrication instructions for items source coded to be manufactured or fabricated are found in TM 55-2840-229-23.

c. Index Numbers. Items which have the word BULK in the figure column will have an index number shown in the item number column. This index number is a cross-reference between the national stock number/part number Index and listed in a bulk materialist in section II.

d. Associated Publications. The publication (s) listed below pertain to Engine Models T53-L-13B and T53-L-703 its components.

TM 55-2840-229-23 Aviation Unit and Aviation Intermediate Maintenance Manual

e. Illustrations - Listing. (Not applicable.)

f. Oversize and Undersize Parts. When studs. bushings, etc., are listed, the degree of oversize or undersize is stated in the description. These parts will have a required quantity shown.

g. Directional Reference. Left and right directions are determined by standing at the rear of the aircraft or engine and looking forward.

h. Shipping and Storage Containers. This manual does not list spare and repair parts required for maintaining shipping and storage containers for T53-L-13B and T53-L-703 engines and modules. Refer to TB 55-8100-200-25, Maintenance of Specialized Reusable Containers for Aircraft Equipment, for requisitioning spare and repair parts.

7. HOW TO LOCATE REPAIR PARTS.

a. When National Stock Numbers or Part Numbers are Not Known.

(1) First. Using the table of contents, determine the assembly group or subassembly group to which the item belongs. This is necessary since figures are prepared for assembly groups and subassembly groups, and listings are divided into the same groups.

(2) Second. Find the figure covering the functional group or the subfunctional group to which the item belongs.

(3) Third. Identify the item on the illustration and note the item number.

b. When National Stock Number or Part Number is Known.

(1) First. If you have the national stock number, look in the STOCK NUMBER column of the National Stock Number Index. The NSN is arranged in national item identification number (NIIN) sequence (see paragraph 4.a.(l)). Note the figure and item number next to the NSN.

(2) Second. Turn to the figure and locate the item number. Verify that the item is the one you are looking for.

NOTE

If you have the part number, look in the PART NUMBER column of the part number index. Identify the figure and item number, look up the item on the figure in section II.

8. Abbreviations. (Not applicable.)

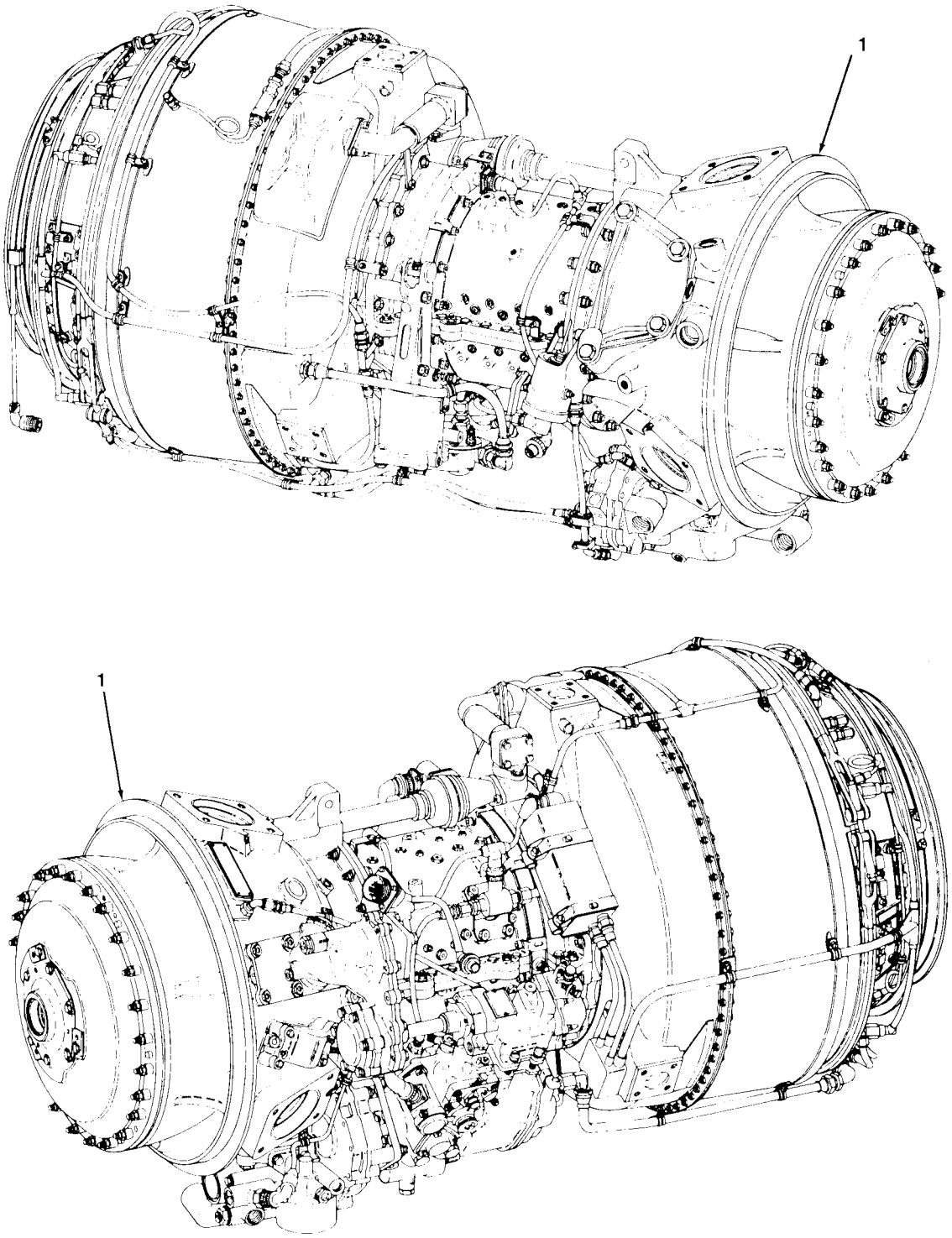

FIGURE 1. TURBINE AIRCRAFT ENGINE

(1) ITEM NO	(2) SMR CODE	(3) NSN	(4) CAGEC	(5) PART NUMBER	(6) DESCRIPTION AND USABLE ON CODE (UOC)	(7) QTY
					GROUP 0400 ENGINE SYSTEM	
					FIG. 1 TURBINE AIRCRAFT ENGINE	
1	PAODD	2840-00-134-4803	91547	1-000-060-22	ENGINE,AIRCRAFT,TUR SEE FIG. 2 THRU 63 FOR BREAKDOWN UOC:EZL	1
1	PAODD	2840-00-621-1860	91547	1-000-060-23	ENGINE,AIRCRAFT,TUR SEE FIG. 2 THRU 63 FOR BREAKDOWN UOC:EZP	1
					END OF FIGURE	

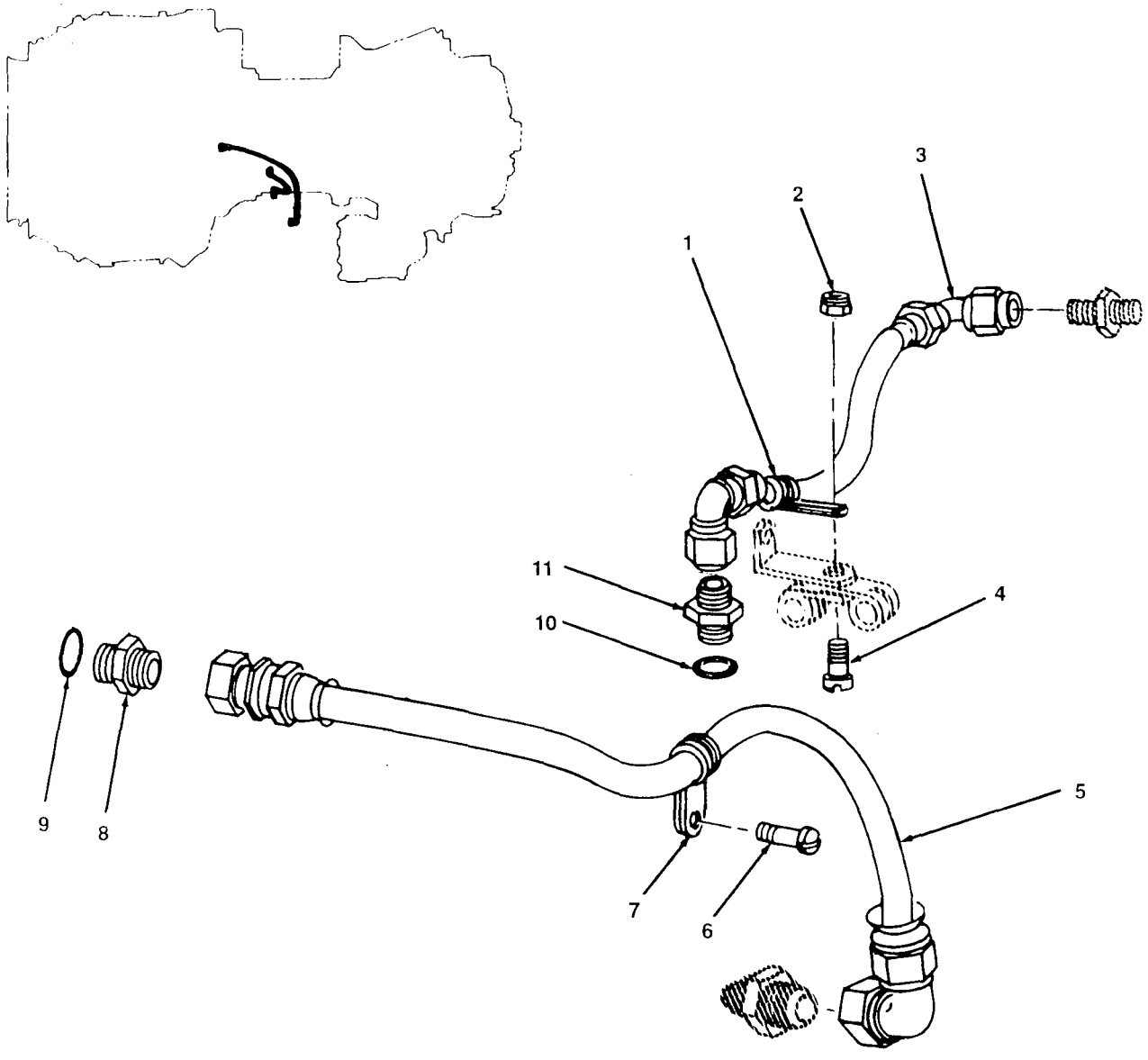

FIGURE 2. AIR BLEED HOSE ASSEMBLIES AND RELATED PARTS

(1) ITEM NO.	(2) SMR CODE	(3) NSN	(4) CAGEC	(5) PART - R R	(6) DESCRIPTION AND USABLE ON CODE (UOC)	(7) QTY
					GROUP 0402 COMPRESSOR SECTION	
					FIG. 2 AIR BLEED HOSE ASSEMBLIES AND RELATED PARTS	
1	PAOZZ	5340-01-047-0632	96906	MS21122C5	CLAMP, LOOP	1
2	PAOZZ	5310-00-066-4289	96906	MS17826-3	NUT, SELF-LOCKING, SL	1
3	PAOZZ	4720-00-966-2232	91547	1-300-138-01	HOSE ASSEMBLY, NONME AIR BLEED	1
4	PAOZZ	5365-00-614-0246	96906	MS35266-63	SCREW, MACHINE	1
5	PAOZZ	4720-00-069-1525	91547	1-300-202-02	HOSE ASSEMBLY, NONME AIR BLEED	1
6	PAOZZ	5305-00-271-7746	88044	AN115807	SCREW, MACHINE USED ON P/N 1-000-060-22 UOC : EZL	1
6	PAOZZ	5305-00-720-8429	96906	MS35266-60	SCREW, MACHINE USED ON P/N 1-000-060-23 UOC : EZP	1
7	PAOZZ	5340-00-420-1747	83930	11168-06	CLAMP, LOOP	1
8	PAOZZ	4730-00-182-9021	96906	MS24392J6	NIPPLE, TUBE	1
9	PAOZZ	5330-00-020-0186	81349	M83248/1-906	PACKING, PREFORMED	1
10	PAOZZ	5330-00-020-0203	81349	M83248/1-904	PACKING, PREFORMED	1
11	PAOZZ	4730-00-684-6912	96906	MS2439234		1

END OF FIGURE

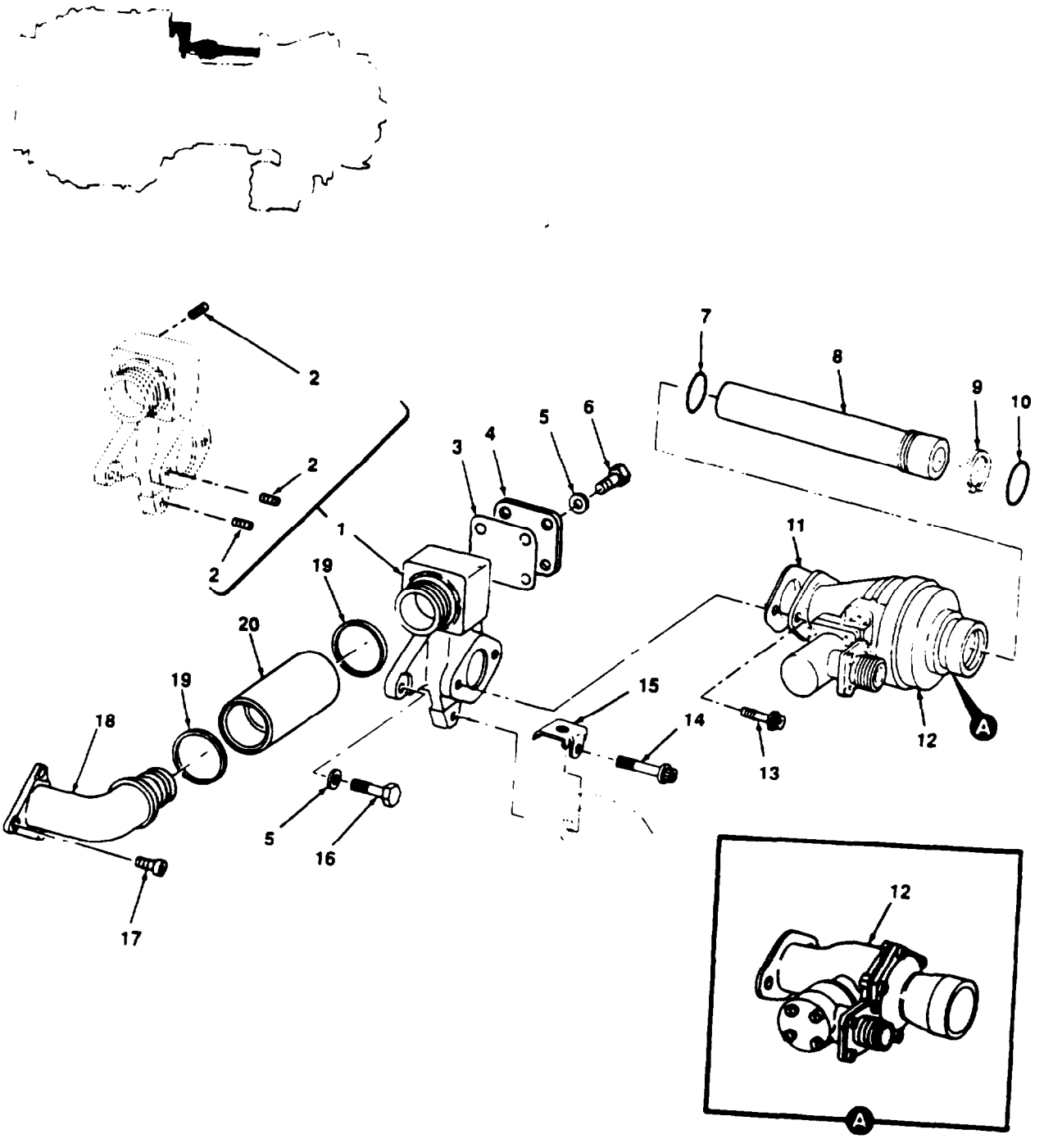

FIGURE 3. ANTI-ICING SOLENOID VALVE, REGULATING TUBE, AND RELATED PARTS

(1) ITEM NO	(2) SMR CODE	(3) NSN	(4) CAGEC	(5) PART NUMBER	(6) DESCRIPTION AND USABLE ON CODE (UOC)	(7) QTY
					GROUP 0402 COMPRESSOR SECTION	
					FIG. 3 ANTI-ICING SOLENOID VALVE REGULATING TUBE,AND RELATED PARTS	
1	PAOOO	2840-01-008-5953	91547	1-170-710-02	ADAPTER ASSEMBLY,AI	1
2	PAOZZ	5340-00-291-3484	96906	MS124696	.INSERT,SCREW THREAD	7
3	PAOZZ	5330-00-984-7138	91547	1-160-299-02	GASKET	1
4	PAOZZ	2840-00-980-9423	91547	1-160-304-01	COVER,PORT,BLEED AI	1
5	PAOZZ	5310-00-167-0835	88044	AN960-416L	WASHER,FLAT	6
6	PAOZZ	5306-00-229-0355	96906	MS9584-06	BOLT,MACHINE	4
7	PAOZZ	5330-00-165-1941	81349	M83248/1-214	PACKING,PREFORMED	1
8	PAOZZ	4710-00-775-6516	91547	1-100-334-05	TUBE,AIR REGULATOR,	1
9	PAOZZ	5365-00-803-7320	96906	MS16624-1106	RING,RETAINING	1
10	PAOZZ	5330-00-166-8404	81349	M83248/1-215	PACKING,PREFORMED	1
11	PAOZZ	5330-00-088-0007	91547	1-160-047-02	GASKET	1
12	PAODD	4810-00-906-2326	45153	26330053	VALVE,SOLENOID ANTI-ICING,SEE FIG. 58 FOR BREAKDOWN	1
12	PAODD	4810-00-068-6712	91547	1-300-194-04	VALVE,SOLENOID ANTI-ICING,SEE FIG. 59 FOR BREAKDOWN	1
13	PAOZZ	5306-01-075-1901	96906	MS9924-08	BOLT,MACHINE	2
14	PAOZZ	5306-01-013-5705	96906	MS9924-32	BOLT,MACHINE	1
15	PAOZZ	5340-00-794-8179	91547	1-160-253-01	CLIP,SPRING TENSION	1
16	PAOZZ	5306-00-259-1054	96906	MS9530-13	BOLT,MACHINE	2
17	PAOZZ	5306-00-825-4803	96906	MS9089-06	BOLT,EXTERNALLY	3
18	PAOZZ	4730-00-910-3068	91547	1-160-033-01	ELBOW,AIR BLEED	1
19	PAOZZ	5330-00-110-8521	91547	1-300-182-01	PACKING,PREFORMED	2
20	PAOZZ	4710-00-925-3021	91547	1-160-619-01	TUBE,CROSSOVER AIR	1
					END OF FIGURE	

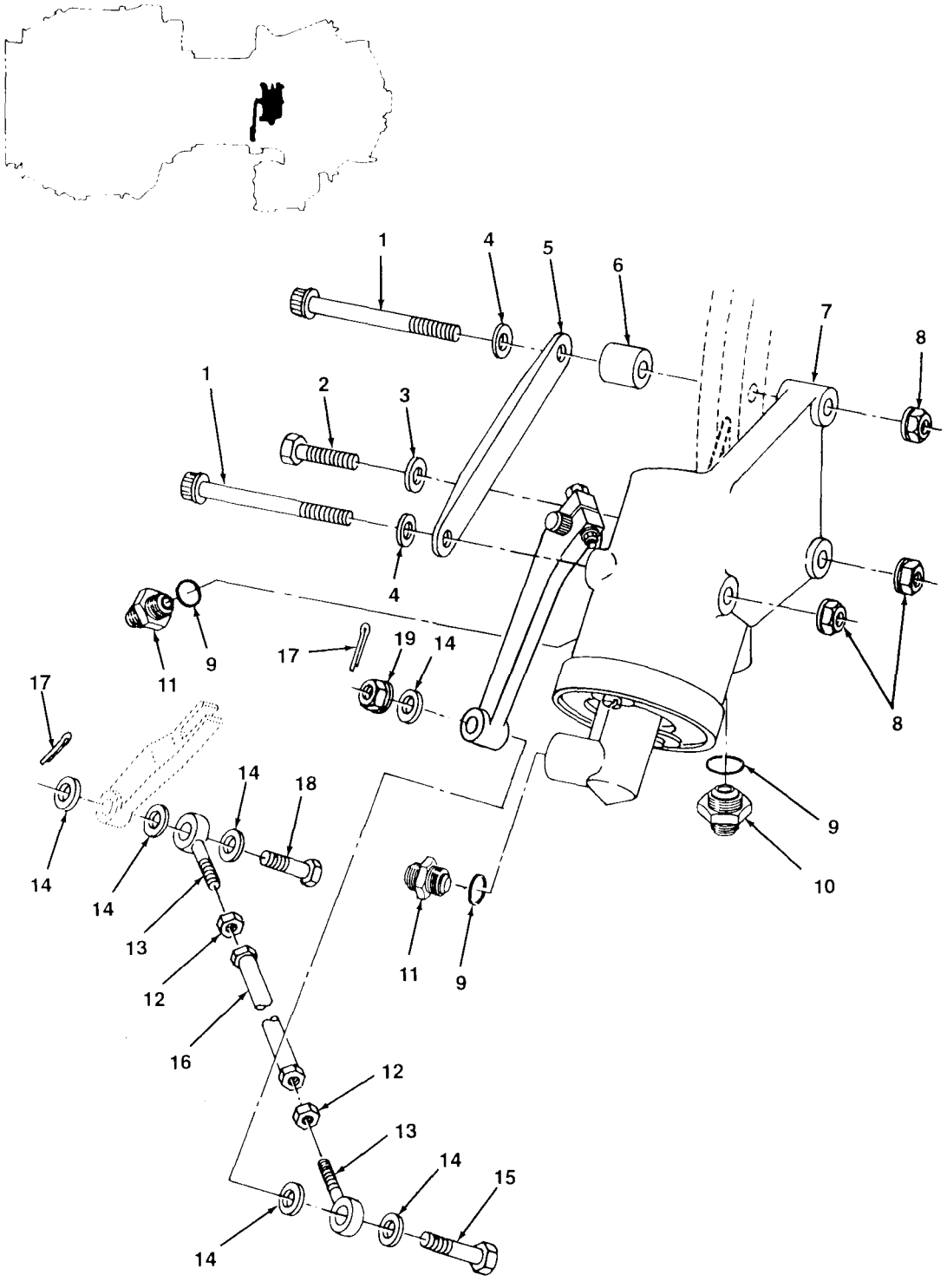

FIGURE 4. INLET GUIDE VANE ACTUATOR AND RELATED PARTS

(1) ITEM NO.	(2) SMR CODE	(3) NSN	(4) CAGEC	(5) PART NUMBER	(6) DESCRIPTION AND USABLE ON CODE (UOC)	(7) QTY
					GROUP 0402 COMPRESSOR SECTION	
					FIG. 4 INLET GUIDE VANS ACTUATOR AND RELATED PARTS	
1	PAOZZ	5306-00-919-0913	96906	MS9147-35	BOLT, MACHINE	2
2	PAOZZ	5306-01-073-3628	96906	MS9519-30	BOLT, MACHINE	1
3	PAOZZ	5310-00-167-0835	88044	AN960-416L	WASHER, FLAT	1
4	PAOZZ	5310-00-531-9515	88044	AN960C416	WASHER, FLAT	2
5	PAOZZ	2040-00-957-9055	91547	1-180-210-01	SUPPORT ASSEMBLY, AC	1
6	PAOZZ	5365-00-928-3876	91547	1-160-607-02	SPACER, SLEEVE	1
7	PAODD	2840-00-924-8648	91547	1-180-150-01	ACTUATOR ASSEMBLY, I SEE FIG. 5 FOR BREAKDOWN	1
8	PAOZZ	5310-00-807-1468	96906	MS21042-4	NUT, SELF-LOCKING, EX	3
9	PAOZZ	5330-00-020-0203	81349	MS3248/1-904	PACKING, PREFORMED	3
10	PAOZZ	4730-00-812-5036	96906	MS24399D3	REDUCER, BOSS	1
11	PAOZZ	4730-00-684-6912	96906	MS2439254	NIPPLE, TUBE	2
12	PAOZZ	5310-00-947-9858	91547	2-161-055-01	NUT, PLAIN, HEXAGON	2
13	PAOZZ	3120-00-904-9829	91547	1-300-341-01	BEARING, PLAIN, ROD B	2
14	PAOZZ	5310-00-167-0834	88044	AN960-10L	WASHER, FLAT	6
15	PAOZZ	5306-00-144-3649	88044	AN3-10	BOLT, MACHINE	1
16	PAOZZ	4710-00-925-2973	91547	1-180-160-01	TUBE ASSEMBLY, METAL	1
17	PAOZZ	5315-00-815-1405	96906	MS24665-151	PIN, COTTER	2
18	PAOZZ	5306-00-680-6779	88044	AN3-6	BOLT, MACHINE	1
19	PAOZZ	5310-00-066-4289	96906	MS17826-3	NUT, SELF-LOCKING, SL	1

END OF FIGURE

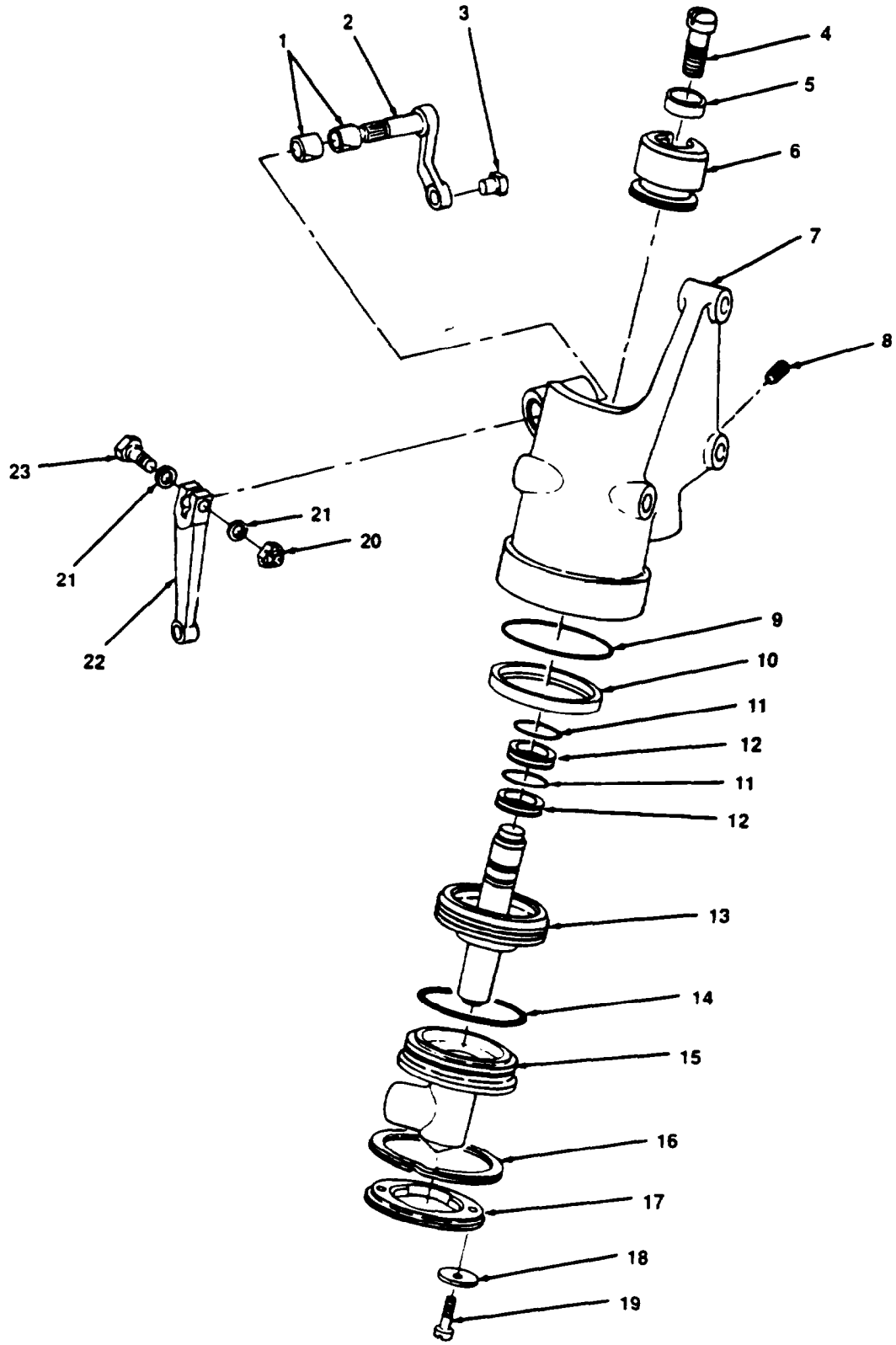

FIGURE 5. INLET GUIDE VANE ACTUATOR

(1) ITEM NO	(2) SMR CODE	(3) NSN	(4) CAGEC	(5) PART NUMBER	(6) DESCRIPTION AND USABLE ON CODE (UOC)	(7) QTY
					GROUP 0402 COMPRESSOR SECTION	
					FIG. 5 INLET GUIDE VANE ACTUATOR	
1	PAOZZ	3120-00-897-3792	91547	1-300-339-01	BEARING,SLEEVE	2
2	PAOZZ	2840-00-946-1496	91547	1-180-103-03	LEVER,ACTUATOR INLE	1
3	PAFZZ	5315-00-944-1093	91547	1-180-104-01	PIN,STRAIGHT,HEADED	1
4	PAFZZ	5305-00-105-0531	91547	1-180-135-01	SCREW,MACHINE	1
5	PAFZZ	5330-00-945-3911	91547	1-180-109-02	RETAINER,PACKING	1
6	PAFZZ	2840-00-924-3562	91547	1-180-101-01	CONNECTOR,BEARING	1
7	XDDZZ		91547	1-180-106-01	HOUSING,ACTUATOR,IN	1
8	XAFZZ		91457	1-300-346-01	PLUG,EXPANSION	1
9	PAFZZ	5330-00-582-7478	96906	MS9021-223	PACKING,PREFORMED	1
10	PAFZZ	5330-00-948-0955	91547	1-300-354-01	PACKING,PREFORMED	1
11	PAFZZ	5330-00-551-9574	96906	MS9021-014	PACKING,PREFORMED	2
12	XDFZZ		91547	1-300-355-03	RETAINER,PACKING	2
13	PAFZZ	3040-00-925-3028	91547	1-180-108-01	PISTON,LINEAR ACTUA	1
14	PAFZZ	5330-00-551-8252	96906	MS9021-030	PACKING,PREFORMED	1
15	PAFZZ	2915-00-925-2980	91547	1-180-107-01	HOUSING,FUEL PUMP	1
16	PAFZZ	5365-00-947-3561	91547	1-300-344-01	RING,RETAINING	1
17	PAFZZ	2995-00-946-6603	91547	1-180-111-01	RETAINER,ACTUATOR G	1
18	PAFZZ	5310-00-944-8062	91547	1-180-114-01	WASHER,FLAT	2
19	PAFZZ	5305-00-952-0959	88044	AN500AD5-5	SCREW,MACHINE	2
20	PAOZZ	5310-00-807-1467	96906	MS21042-3	NUT,SELF-LOCKING,EX	1
21	PAOZZ	5310-00-167-0834	88044	AN960-10L	WASHER,FLAT	2
22	PAOZZ	1560-00-947-6222	91547	1-180-105-02	LEVER,REMOTE CONTRO	1
23	PAOZZ	5306-00-144-3649	88044	AN3-10	BOLT,MACHINE	1
					END OF FIGURE	

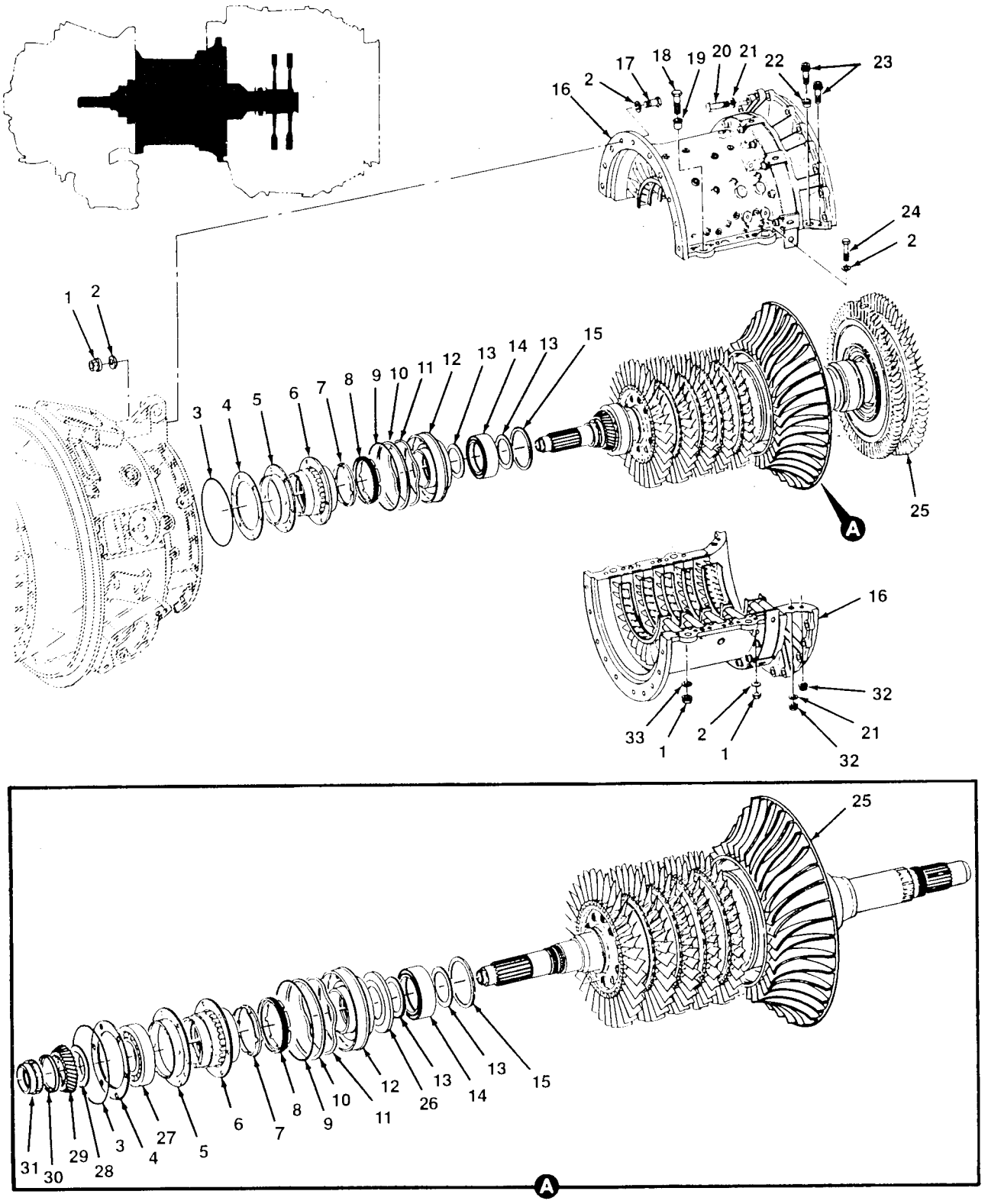

FIGURE 6. COMPRESSOR AND IMPELLER HOUSING ASSEMBLY, COMPRESSOR ROTOR ASSEMBLY, AND RELATED PARTS

(1) ITEM NO	(2) SMR CODE	(3) NSN	(4) CAGEC	(5) PART NUMBER	(6) DESCRIPTION AND USABLE ON CODE (UOC)	(7) QTY
					GROUP 0402 COMPRESSOR SECTION	
					FIG. 6 COMPRESSOR AND IMPELLER HOUSING ASSEMBLY,COMPRESSOR ROTOR ASSEMBLY,AND RELATED PARTS	
1	PAOZZ	5310-00-807-1468	96906	MS21042-4	NUT,SELF-LOCKING,EX	31
2	PAOZZ	5310-00-167-0835	88044	AN960-416L	WASHER,FLAT	54
3	PADZZ	5330-00-165-1936	81349	M83248/1-159	PACKING,PREFORMED	1
4	PADZZ	5365-00-016-2894	91547	1-060-124-01	SPACER,PLATE 0.020 - 0.022 IN. THK	V
4	PADZZ	5365-00-016-2915	91547	1-060-124-02	SPACER,PLATE 0.028 - 0.030 IN. THK	V
4	PADZZ	5365-00-016-2916	91547	1-060-124-03	SHIM 0.036 - 0.038 IN. THK	V
4	PADZZ	5365-00-016-2917	91547	1-060-124-04	SPACER,PLATE 0.044 - 0.046 IN. THK	V
4	PADZZ	5365-00-016-2918	91547	1-060-124-05	SPACER,PLATE 0.052 - 0.054 IN. THK	V
4	PADZZ	5365-00-016-2919	91547	1-060-124-06	SPACER,PLATE 0.060 - 0.062 IN. THK	V
4	PADZZ	5365-00-016-2921	91547	1-060-124-07	SHIM 0.068 - 0.070 IN THK	V
4	PADZZ	5365-00-016-2923	91547	1-060-124-08	SPACER,COMPRESSOR,F 0.076 - 0.078 IN. THK	V
4	PADZZ	5365-00-016-2933	91547	1-060-124-09	SPACER,PLATE 0.084 - 0.086 IN. THK	V
4	PADZZ	5365-00-016-2934	91547	1-060-124-10	SPACER,COMPRESSOR,F 0.092 - 0.094 IN. THK	V
5	PADZZ	2840-00-015-6936	91547	1-060-122-01	SLEEVE, COMPRESSOR,	1
6	PADZZ	2840-00-961-1394	91547	1-060-190-01	HOUSING,ANTIFRICTIO	1
7	PADZZ	2840-00-015-6935	91547	1-060-125-01	CUP, LOCKING, COMPR	1
8	PADZZ	5365-00-017-2675	91547	1-060-126-01	RING,EXTERNALLY THR	1
9	PADZZ	5330-01-073-3688	91547	STD301.9E72	PACKING,PREFORMED	1
10	PADZZ	5365-00-950-2905	91547	1-060-141-01	SPACER,RING 0.020 - 0.022 IN THK	V
10	PADZZ	5365-00-950-2928	91547	1-060-141-02	SPACER,RING 0.028 - 0.030 IN. THK	V
10	PADZZ	5365-00-950-2988	91547	1-060-141-03	SPACER,RING 0.036 - 0.038 IN. THK	V
10	PADZZ	5365-00-950-2991	91547	1-060-141-04	SPACER,RING 0.044 - 0.046 IN. THK	V
10	PADZZ	5365-00-950-2992	91547	1-060-141-05	SPACER,RING 0.052 - 0.054 IN. THK	V
10	PADZZ	5365-00-950-2993	91547	1-060-141-06	SPACER,RING 0.060 - 0.062 IN. THK	V
10	PADZZ	5365-00-950-3002	91547	1-060-141-07	SPACER,RING 0.068 - 0.070 IN. THK	V
10	PADZZ	5365-00-950-3008	91547	1-060-141-08	SPACER,RING 0.076 - 0.078 IN. THK	V
10	PADZZ	5365-00-950-3051	91547	1-060-141-09	SPACER,RING 0.084 - 0.086 IN. THK	V
10	PADZZ	5365-00-950-3232	91547	1-060-141-10	SPACER,RING 0.092 - 0.094 IN. THK	V
11	PADZZ	5310-00-952-7392	91547	1-060-139-01	WASHER,SPRING TENSI	1
12	PADZZ	2840-00-945-5602	91547	1-060-127-04	HOUSING,BEARING SEA	1
13	PAFZZ	5365-01-006-1148	91547	1-060-162-01	SPACER,RING 0.019 - 0.021 IN. THK	V
13	PAFZZ	5365-01-006-1149	91547	1-060-162-02	SPACR,RING 0.022 - 0.024 IN. THK	V
13	PAFZZ	5365-01-007-1066	91547	1-060-162-03	SPACER,RING 0.025 - 0.027 IN. THK	V
13	PAFZZ	5365-01-006-1150	91547	1-060-162-04	SPACER,RING 0.028 - 0.030 IN. THK	V
13	PAFZZ	5365-01-044-8091	91547	1-060-162-05	SPACER,RING 0.031 - 0.033 IN. THK	V
13	PAFZZ	5365-01-044-8092	91547	1-060-162-06	SPACER,RING 0.034 - 0.036 IN. THK	V
14	PADZZ	5330-01-008-8243	91547	1-300-585	SEAL ASSEMBLY,SHAFT	1
15	PAFZZ	5365-01-334-0222	91547	1-300-047-01	RING,RETAINING	1
16	ADDDD		91547	1-101-520-01	HOUSING SUBASSEMBLY (HOUSING ASSEMBLY,COMPRESSOR AND IMPRELLER) SEE FIG. 7 FOR BREAKDOWN	1
17	PAOZZ	5306-00-239-7799	96906	MS9519-22	BOLT,MACHINE	15
18	PAOZZ	5306-00-239-7798	96906	MS9519-17	BOLT,MACHINE	4
19	PAOZZ	5340-00-067-8304	91547	1-100-186-01	DOWEL,HOLLOW	4
20	PAOZZ	5306-01-078-8927	96906	MS9958-09	BOLT,MACHINE	22
21	PAOZZ	5310-00-531-9515	88044	AN960C416	WASHER,FLAT	14
22	PAOZZ	5340-01-010-1514	91547	1-100-538-01	INSERT,SCREW THREAD	2
23	PAOZZ	5306-01-013-2962	96906	MS9915-11	BOLT,MACHINE	4
24	PAOZZ	5306-00-760-7299	96906	MS9519-15	BOLT,MACHINE	12

(1) ITEM NO	(2) SMR CODE	(3) NSN	(4) CAGEC	(5) PART NUMBER	(6) DESCRIPTION AND USABLE ON CODE (UOC)	(7) QTY
25	ADDDD		91547	1-100-720-47	COMPRESSOR ROTOR AX (T53-L-13B),PART OF P/N 1-000-060-22,SEE FIG. 11 FOR BREAKDOWN UOC:EZL	1
25	ADDDD		91547	1-100-720-51	COMPRESSOR ROTOR AX (T53-L-13B),PART OF P/N 1-000-060-22,SEE FIG. 11 FOR BREAKDOWN UOC:EZL	1
25	ADDDD		91547	1-101-510-04	ROTOR ASSY COMPRESS (T53-L-703),PART OF P/N 1-000-060-23,SEE FIG. 14 FOR BREAKDOWN UOC:EZP	1
26	PADZZ	2840-01-008-1373	91547	1-300-588-01	PLATE,FACE,BEARING (T53-L-703) UOC:EZP	1
27	PADDD	3110-00-727-3032	91547	1-300-015-04	BEARING,BALL,ANNULA (T53-L-703) UOC:EZP	1
28	PADZZ	5365-00-834-6403	91547	1-100-213-02	SPACER,RING (T53-L-703),0.230 - 0.0259 IN. THK UOC:EZP	V
28	PADZZ	5365-00-833-1224	91547	1-100-213-03	SPACER,RING (T53-L-703),0.0260 - 0.0289 IN. THK UOC:EZP	V
28	PADZZ	5365-00-834-6402	91547	1-100-213-04	SPACER,RING (T53-L-703a),0.0290 - 0.0319 IN. THK UOC:EZP	V
28	PADZZ	5365-00-833-1225	91547	1-100-213-05	SPACER,RING (T53-L-703),0.0320 - 0.0349 IN. THK UOC:EZP	V
28	PADZZ	5365-00-833-1222	91547	1-100-213-06	SPACER,RING (T53-L-703),0.0350 - 0.0379 IN. THK UOC:EZP	V
28	PADZZ	5365-00-833-1221	91547	1-100-213-07	SPACER,RING (T53-L-703),0.0380 - 0.0409 IN. THK UOC:EZP	V
28	PADZZ	5365-00-833-1220	91547	1-100-213-08	SPACER,RING (T53-L-703),0.0410 - 0.0439 IN. THK UOC:EZP	V
28	PADZZ	5365-00-834-6404	91547	1-100-213-09	SPACER,RING (T53-L-703),0.0440 - 0.0469 IN. THK UOC:EZP	V
28	PADZZ	5365-00-833-3537	91547	1-100-213-10	SPACER,RING (T53-L-703),0.0470 - 0.0499 IN. THK UOC:EZP	V
28	PADZZ	5365-00-833-1228	91547	1-100-213-11	SPACER,RING (T53-L-703),0.500 - 0.0529 IN. THK UOC:EZP	V
28	PADZZ	5365-00-833-1230	91547	1-100-213-12	SPACER,RING (T53-L-703),0.0530 - 0.0559 IN. THK UOC:EZP	V
28	PADZZ	5365-00-475-0067	91547	1-100-213-13	SPACER,RING (T53-L-703),0.0560 - 0.0589 IN. THK UOC:EZP	V
28	PADZZ	5365-00-833-1227	91547	1-100-213-14	SPACER,RING (T53-L-703),0.0590 - 0.0619 IN. THK UOC:EZP	V

(1) ITEM NO	(2) SMR CODE	(3) NSN	(4) CAGEC	(5) PART NUMBER	(6) DESCRIPTION AND USABLE ON CODE (UOC)	(7) QTY
28	PADZZ	5365-00-833-1229	91547	1-100-213-15	SPACER,RING (T53-L-703),0.0620 - 0.0649 IN. THK UOC:EZP	V
28	PADZZ	5365-00-856-1115	91547	1-100-213-16	SPACER,RING (T53-L-703),0.0200 - 0.0229 IN. THK UOC:EZP	V
28	PADZZ	5365-00-989-2827	91547	1-100-213-17	SPACER,RING (T53-L-703),0.0170 - 0.0199 IN. THK UOC:EZP	V
28	PADZZ	5365-00-989-2828	91547	1-100-213-18	SPACER,RING (T53-L-703),0.0140 - 0.0169 IN. THK UOC:EZP	V
28	PADZZ	5365-00-989-2829	91547	1-100-213-19	SHIM (T53-L-703),0.0110 - 0.0139 IN. THK UOC:EZP	V
28	PADZZ	5365-00-987-9525	91547	1-100-213-20	SPACER,RING (T53-L-703),0.0650 - 0.0679 IN. THK UOC:EZP	V
28	PADZZ	5365-00-987-9526	91547	1-100-213-21	SPACER,RING (T53-L-703),0.0680 - 0.0790 IN. THK UOC:EZP	V
29	PADZZ	3020-00-671-0164	91547	1-100-212-01	GEAR,BEVEL (T53-L-703) UOC:EZP	1
30	PADZZ	3130-00-896-6276	91547	1-100-276-01	RING LOCKING,CUP (T53-L-703) UOC:EZP	1
31	PADZZ	2840-00-944-2567	91547	1-300-077-01	SEAL AND NUT,POWER (T53-L-703) UOC:EZP	1
33	PAOZZ	5310-01-091-1248	96906	MS15795-810	WASHER,FLAT	4

END OF FIGURE

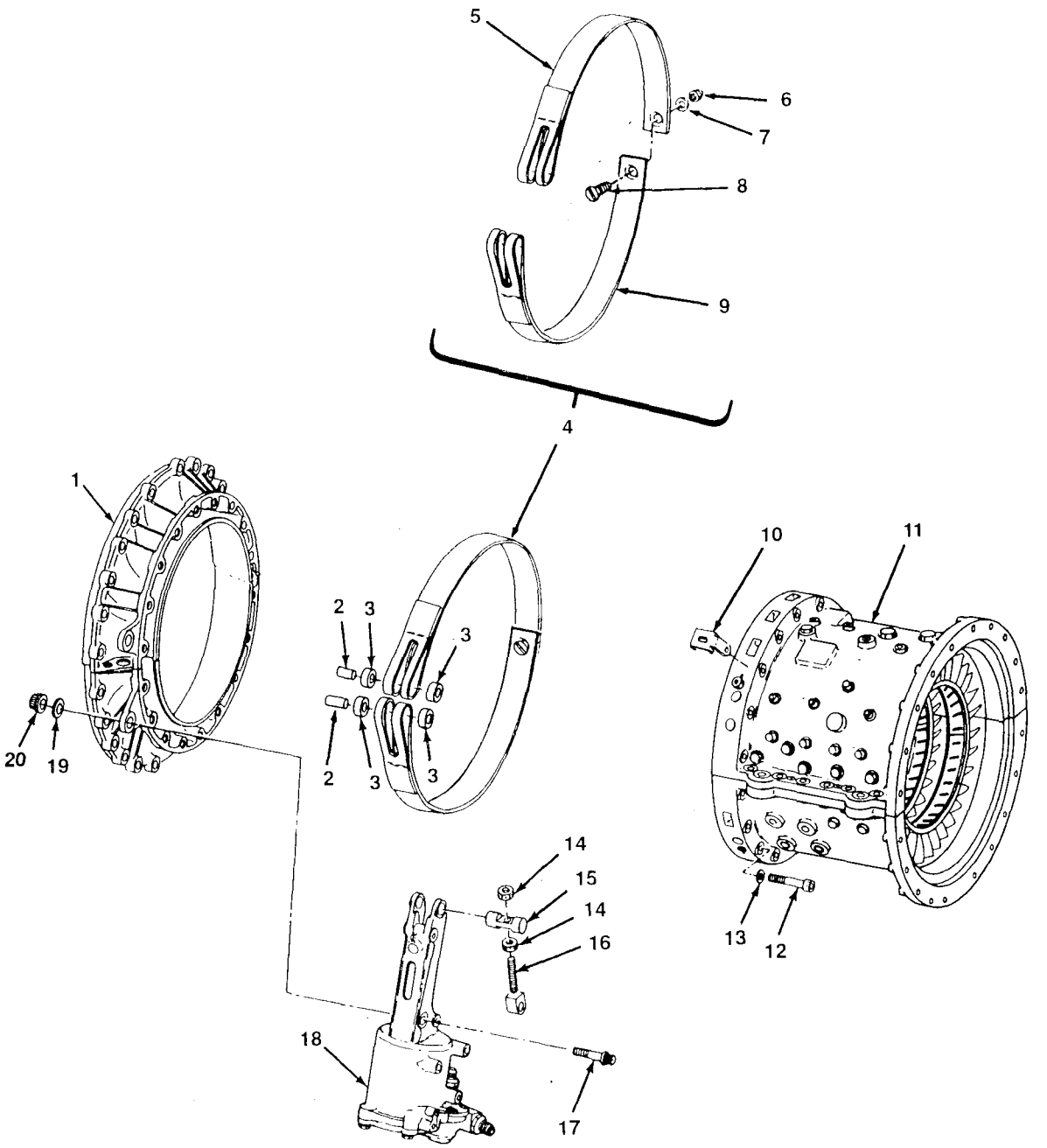

FIGURE 7. COMPRESSOR AND IMPELLER HOUSING ASSEMBLY

(1)	(2)	(3)	(4)	(5)	(6)	(7)
ITEM NO	SMR CODE	NSN	CAGEC	PART NUMBER	DESCRIPTION AND USABLE ON CODE (UOC)	QTY
					GROUP 0402 COMPRESSOR SECTION	
					FIG. 7 COMPRESSOR AND IMPELLER HOUSING ASSEMBLY	
1	PAODD	2840-01-008-5730	91547	1-101-370-03	CASE,CENTRIFUGAL CO	1
2	PAOZZ	5315-01-076-6509	96906	MSJ9390-570	PIN,STRAIGHT,HEADLE	2
3	PAOZZ	3120-00-904-2479	91547	1-160-343-01	BEARING,SLEEVE	4
4	AOOOO		91547	1-160-820-04	BAND ASSEMBLY,INTER	1
5	PAOZZ	2840-00-948-9351	91547	1-160-244-01	.BAND,COMPRESSOR	1
6	PAOZZ	5310-00-807-1469	96906	MS21042-5	.NUT,SELF-LOCKING,EX	1
7	PAOZZ	5310-00-167-0820	88044	AN960-516	.WASHER,FLAT	1
8	PAOZZ	5305-00-830-1643	91547	1-160-265-01	.SCREW,MACHINE	1
9	PAOZZ	5340-00-948-9358	91547	1-160-245-01	.BAND,RETAINING	1
10	PAOZZ	5340-00-794-8179	91547	1-160-253-01	CLIP,SPRING TENSION	6
11	ADODD		91547	1-100-140-09	CASE,AND VANE ASSEM SEE FIG.8 FOR BREAKDOWN	1
12	PAOZZ	5306-01-019-3490	96906	MS9924-25	BOLT,MACHINE	17
13	PAOZZ	5310-00-167-0835	88044	AN960-416L	WASHER,FLAT	17
14	PAOZZ	5310-00-833-5446	91547	1-160-272-01	NUT,PLAIN,HEXAGON	2
15	PAOZZ	5315-00-522-2358	91547	1-160-254-01	PIN,INTERSTAGE AIR	1
16	PAOZZ	2840-00-605-5137	91547	1-160-920-01	SCREW ASSEMBLY,INTE	1
17	PAOZZ	5306-01-015-0987	96906	MS9944-27	BOLT,MACHINE	2
18	PAODD	2995-01-008-7763	91547	1-170-050-12	ACTUATOR ASSEMBLY,I SEE FIG.10 FOR BREAKDOWN	1
19	PAOZZ	5310-00-167-0837	88044	AN960-616L	WASHER,FLAT	2
20	PAOZZ	5310-01-014-5135	91547	STD3064-6	NUT,SELF-LOCKING,EX	2
					END OF FIGURE	

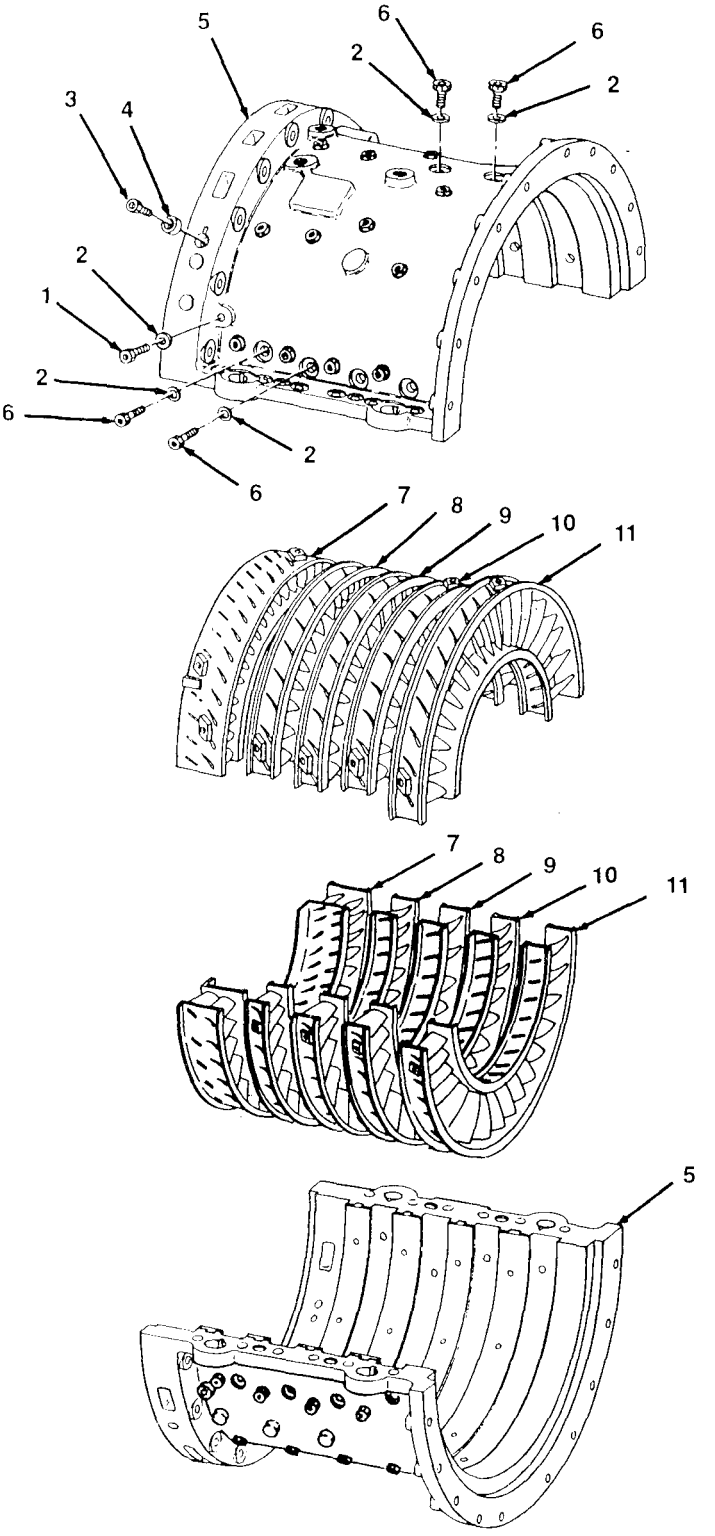

FIGURE 8. CASE AND VANE ASSEMBLY

(1) ITEM NO	(2) SMR CODE	(3) NSN	(4) CAGEC	(5) PART NUMBER	(6) DESCRIPTION AND USABLE ON CODE (UOC)	(7) QTY
					GROUP 0402 COMPRESSOR SECTION	
					FIG. 8 CASE AND VANE ASSEMBLY	
1	PAOZZ	5306-00-298-2808	88044	AN103710	BOLT,MACHINE	6
2	PAOZZ	5310-00-167-0812	88044	AN960C10L	WASHER,FLAT	30
3	PAOZZ	5306-00-537-2033	91547	1-100-214-03	BOLT,SPECIAL,SOCKET	4
4	PAOZZ	2840-00-731-8916	91547	1-080-028-03	RETAINER,BOLT,COMPR	4
5	PAOZZ	2840-01-008-5729	91547	1-101-210-04	CASE,AXIAL COMPRESS SEE FIG. 9 FOR BREAKDOWN	1
6	XDOZZ		91547	1-100-002-01	BOLT,MACHINE	24
7	PAOZZ	2840-00-925-9620	91547	1-101-040-01	VANE ASSEMBLY,STATO	1
8	PAOZZ	2840-00-925-9644	91547	1-101-030-01	VANE ASSEMBLY,STATO	1
9	PAOZZ	2840-00-925-9621	91547	1-101-020-01	VANE ASSEMBLY,STATO	1
10	PAOZZ	2840-00-925-9834	91547	1-101-120-03	VANE ASSEMBLY,STATO	1
11	PAOZZ	2840-00-946-2416	91547	1-101-110-07	VANE ASSEMBLY,STATO	1

END OF FIGURE

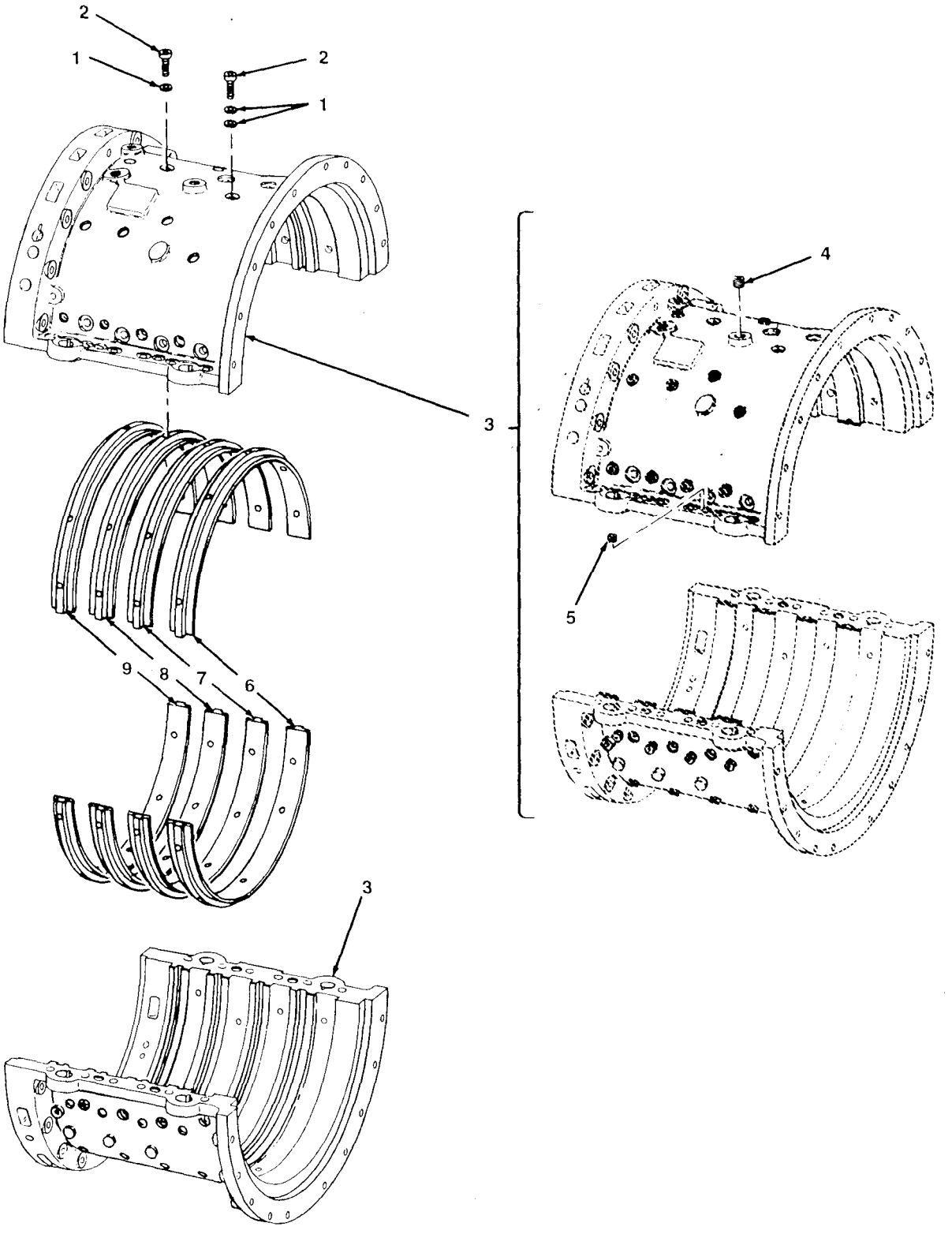

FIGURE 9. AXIAL COMPRESSOR CASE

(1)	(2)	(3)	(4)	(5)	(6)	(7)
ITEM NO	SMR CODE	NSN	CAGEC	PART NUMBER	DESCRIPTION AND USABLE ON CODE (UOC)	QTY
					GROUP 0402 COMPRESSOR SECTION	
					FIG. 9 AXIAL COMPRESSOR CASE	
1	PAOZZ	5310-00-906-3630	91547	1-100-463-01	WASHER,FLAT	50
2	PAOZZ	5305-00-966-2431	91547	1-100-462-01	SCREW,CAP,SOCKET HE	40
3	XADZZ		91547	1-100-980-05	HOUSING,SUB ASSDY	1
4	PAOZZ	5340-00-597-3302	96906	MS124695	.INSERT,SCREW THREAD	7
5	PAOZZ	5340-00-286-6600	96906	MS124656	.INSERT,SCREW THREAD	4
6	PADZZ	2840-01-177-5697	81996	T53L0-I0066-1	INSERT,COMPRESSOR H SECOND STAGE	1
7	PADZZ	2840-01-179-0793	81996	T53L0-I0066-3	INSERT,COMPRESSOR H THIRD STAGE	1
8	PADZZ	2840-01-177-5698	81996	T53L0-I0066-5	INSERT,COMPRESSOR H FOURTH STAGE	1
9	PADZZ	2840-01-177-5699	81996	T53L0-I0066-7	INSERT,COMPRESSOR H FIFTH STAGE	1
					END OF FIGURE	

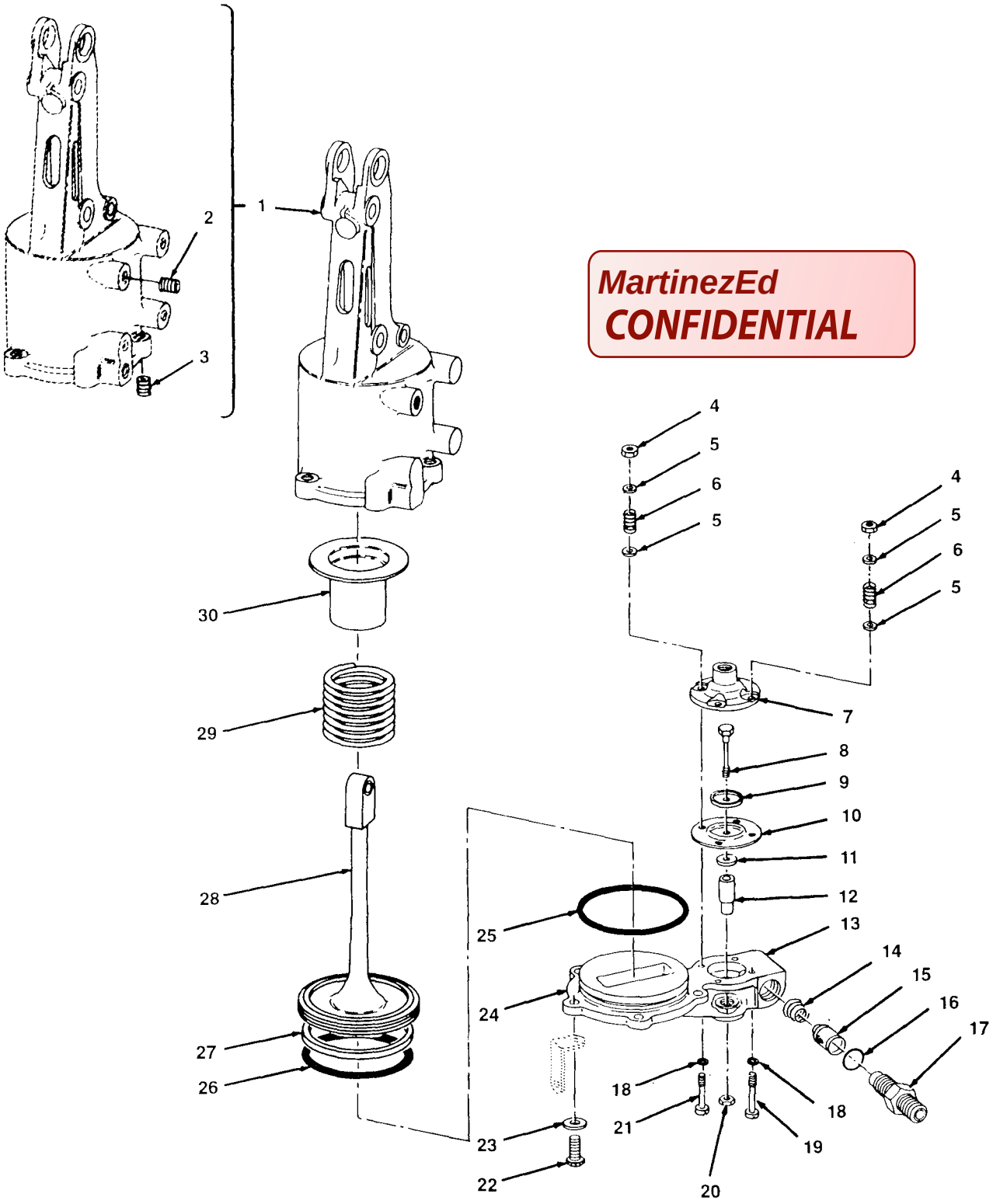

MartinezEd
CONFIDENTIAL

FIGURE 10. INTERSTAGE AIR BLEED ACTUATOR

(1) ITEM NO	(2) SMR CODE	(3) NSN	(4) CAGEC	(5) PART NUMBER	(6) DESCRIPTION AND USABLE ON CODE (UOC)	(7) QTY
					GROUP 0402 COMPRESSOR SECTION	
					FIG. 10 INTERSTAGE AIR BLEED ACTUATOR	
1	PAFZZ	2840-00-961-1399	92547	1-160-760-04	HOUSING ASSY,ACTUAT	1
2	PAOZZ	5340-00-597-3302	96906	MS124695	.INSERT,SCREW THREAD	1
3	PAOZZ	5340-00-291-3484	96906	MS124696	.INSERT,SCREW THREAD	5
4	PAOZZ	5310-00-807-1474	96906	MS21042L3	NUT,SELF-LOCKING,EX	4
5	PAOZZ	5310-00-167-0818	88044	AN960-10	WASHER,FLAT	8
6	PAOZZ	5360-00-533-3856	91547	1-180-049-01	SPRING,HELICAL,COMP	4
7	PAOZZ	2840-00-961-1398	91547	1-160-592-03	CAP,RELAY VALVE	1
8	PAOZZ	4730-00-963-5333	91547	1-160-593-01	BOLT,FLUID PASSAGE	1
9	PAOZZ	5310-00-845-0956	91547	1-180-017-01	WASHER,RECESSED	1
10	PAFZZ	4810-00-625-3900	91547	1-300-582-01	DIAPHRAGM,VALVE,SPE	1
11	PAOZZ	5310-00-845-0955	91547	1-180-004-01	WASHER,FLAT	1
12	PAOZZ	5365-00-949-5471	91547	1-160-617-02	SPACER,VALVE,AIR BL	1
13	PAOZZ	2995-00-867-6644	91547	1-160-596-03	SEAT,VALVE,AIR BLEE	1
14	PAOZZ	5360-00-087-3459	91547	2-160-267-01	SPRING,HELICAL,COMP	1
15	PAOZZ	2945-00-482-9071	91547	2-300-361-01	STRAINER ELEMENT,SE	1
16	PAOZZ	5330-00-020-0105	81349	M83248/1-908	PACKING,PREFORMED	1
17	PAOZZ	4730-00-803-7981	96906	MS24399D13	REDUCER,TUBE	1
18	PAOZZ	5310-00-088-8008	91547	1-160-605-01	WASHER,FLAT	4
19	PAOZZ	5305-00-622-9486	96906	MS35266-68	SCREW,MACHINE	2
20	PAOZZ	5310-00-958-4505	91547	1-160-597-01	NUT,PLAIN,HEXAGON	1
21	PAOZZ	5305-00-655-6573	96906	MS35266-71	SCREW,MACHINE	2
22	PAOZZ	5306-01-078-8927	96906	MS9958-09	BOLT,MACHINE	5
23	PAOZZ	5310-00-167-0835	88044	AN960-416L	WASHER,FLAT	5
24	PAOZZ	2840-00-949-5457	91547	1-160-591-07	COVER,ACTUATOR,INTE	1
25	PAOZZ	5330-00-167-5135	81349	M83248/1-149	PACKING,PREFORMED	1
26	PAOZZ	5330-00-165-1950	81349	M83248/1-232	PACKING,PREFORMED	1
27	PAOZZ	5330-00-737-5627	91547	1-300-237-01	SEAL,ACTUATOR ASSEM	1
28	PAOZZ	3040-00-943-2529	91547	1-160-342-01	PISTON,LINEAR ACTUA	1
29	PAOZZ	5360-00-533-3805	91547	1-160-268-02	SPRING,HELICAL,COMP	1
30	PAOZZ	5340-00-942-9755	91547	1-160-341-01	SEAT,HELICAL COMPRE	1
					END OF FIGURE	

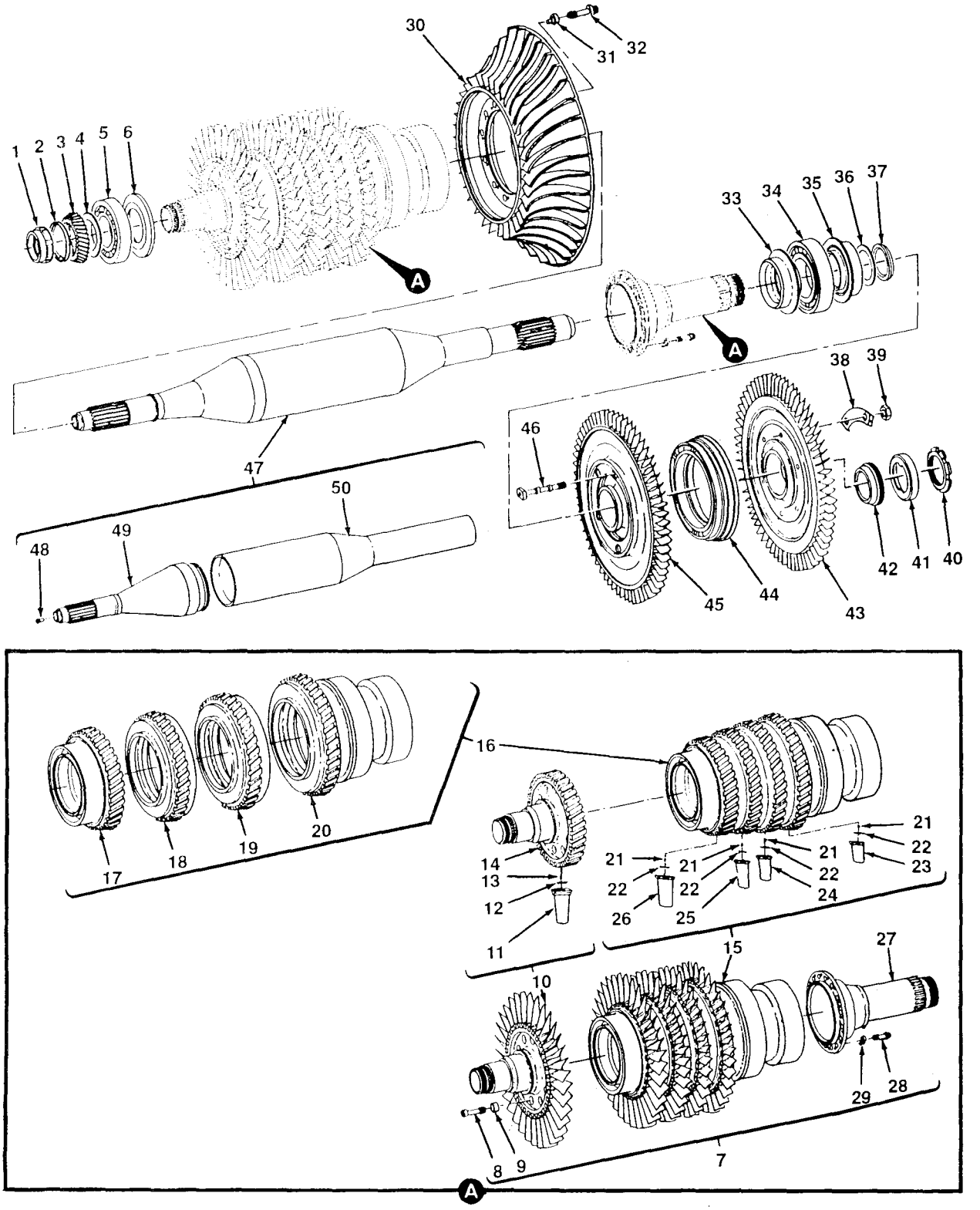

FIGURE 11. COMPRESSOR ROTOR ASSEMBLY
(T53-L-13B)

(1) ITEM NO	(2) SMR CODE	(3) NSN	(4) CAGEC	(5) PART NUMBER	(6) DESCRIPTION AND USABLE ON CODE (UOC)	(7) QTY
					GROUP 0402 COMPRESSOR SECTION	
					FIG. 11 COMPRESSOR ROTOR ASSEMBLY (T53-L-13B)	
1	PADZZ	2840-00-944-2567	91547	1-300-077-01	SEAL AND NUT,POWER UOC:EZL	1
2	PADZZ	3130-00-896-6276	91547	1-100-276-01	RING LOCKING,CUP UOC:EZL	1
3	PADZZ	3020-00-671-0164	91547	1-100-212-01	GEAR,BEVEL UOC:EZL	1
4	PADZZ	5365-00-834-6403	91547	1-100-213-02	SPACER,RING 0.0230 - 0.0259 IN. THK UOC:EZL	V
4	PADZZ	5365-00-833-1224	91547	1-100-213-03	SPACER,RING 0.0260 - 0.0289 IN. THK UOC:EZL	V
4	PADZZ	5365-00-834-6402	91547	1-100-213-04	SPACER,RING 0.0290 - 0.0319 IN. THK UOC:EZL	V
4	PADZZ	5365-00-833-1225	91547	1-100-213-05	SPACER,RING 0.0320 - 0.0349 IN. THK UOC:EZL	V
4	PADZZ	5365-00-833-1222	91547	1-100-213-06	SPACER,RING 0.0350 - 0.0379 IN. THK UOC:EZL	V
4	PADZZ	5365-00-833-1221	91547	1-100-213-07	SPACER,RING 0.0380 - 0.0409 IN. THK UOC:EZL	V
4	PADZZ	5365-00-833-1220	91547	1-100-213-08	SPACER,RING 0.0410 - 0.0439 IN THK UOC:EZL	V
4	PADZZ	5365-00-834-6404	91547	1-100-213-09	SPACER,RING 0.0440 - 0.0469 IN THK UOC:EZL	V
4	PADZZ	5365-00-833-3537	91547	1-100-213-10	SPACER,RING 0.0470 - 0.0499 IN. THK UOC:EZL	V
4	PADZZ	5365-00-833-1228	91547	1-100-213-11	SPACER,RING 0.0500 - 0.0529 IN. THK UOC:EZL	V
4	PADZZ	5365-00-833-1230	91547	1-100-213-12	SPACER,RING 0.0530 - 0.0599 IN. THK UOC:EZL	V
4	PADZZ	5365-00-475-0067	91547	1-100-213-13	SPACER,RING 0.0560 - 0.0589 IN. THK UOC:EZL	V
4	PADZZ	5365-00-833-1227	91547	1-100-213-14	SPACER,RING 0.0590 - 0.0619 IN. THK UOC:EZL	V
4	PADZZ	5365-00-833-1229	91547	1-100-213-15	SPACER,RING 0.0620 - 0.0649 IN. THK UOC:EZL	V
4	PADZZ	5365-00-856-1115	91547	1-100-213-16	SPACER,RING 0.0200 - 0.0229 IN. THK UOC:EZL	V

(1) ITEM NO	(2) SMR CODE	(3) NSN	(4) CAGEC	(5) PART NUMBER	(6) DESCRIPTION AND USABLE ON CODE (UOC)	(7) QTY
4	PADZZ	5365-00-989-2827	91547	1-100-213-17	SPACER,RING 0.0170 - 0.0199 IN. THK UOC:EZL	V
4	PADZZ	5365-00-989-2828	91547	1-100-213-18	SPACER,RING 0.0140 - 0.0169 IN. THK UOC:EZL	V
4	PADZZ	5365-00-989-2829	91547	1-100-213-19	SHIM 0.0110 - 0.0139 IN. THK UOC:EZL	V
4	PADZZ	5365-00-987-9525	91547	1-100-213-20	SPACER,RING 0.0650 - 0.0679 IN. THK UOC:EZL	V
4	PADZZ	5365-00-987-9526	91547	1-100-213-21	SPACER,RING 0.0680 - 0.0709 IN. THK UOC:EZL	V
5	PADDD	3110-00-727-3032	91547	1-300-015-04	BEARING,BALL,ANNULA UOC:EZL	1
6	PAFZZ	2840-01-008-1373	91547	1-300-588-01	PLATE,FACE,BEARING UOC:EZL	1
7	ADDDD		91547	1-101-260-11	ROTOR ASSY COMPRESO UOC:EZL	1
8	PADZZ	5306-00-177-5723	91547	1-100-506-02	BOLT,INTERNAL WRENC UOC:EZL	10
9	PADZZ	2840-00-769-9901	91547	1-080-028-02	.RETAINER,BOLT UOC:EZL	10
10	ADDDD		91547	1-101-080-06	.SHAFT ASSEMBLY UOC:EZL	1
11	PADZZ	2840-00-176-3780	91547	1-100-361-06	..BLADE,COMPRESSOR RO 1ST STAGE,FOR FIELD REPLACEMENT,USE P/N 1-100-361-05 UOC:EZL	31
11	PAOZZ	2840-00-176-3788	91547	1-100-361-05	..BLADE SET,COMPRESSO 1ST STAGE,FIELD REPLACEMENT UOC:EZL	16
12	PAOZZ	5340-00-181-1225	91547	1-100-505-02	..PLATE,MENDING UOC:EZL	31
13	PAFZZ	5315-01-038-1446	91547	1-300-268-02	..PIN,SPRING UOC:EZL	31
14	PADZZ	2840-01-006-1118	91547	1-100-495-07	..DISK AND HUB,AXIAL UOC:EZL	1
15	ADDDD		91547	1-101-090-07	.ROTOR,SUB ASSY,COMP UOC:EZL	1
16	PADDD	2840-01-154-7142	91547	1-101-250-04	..DISK AND HUB,GAS TU UOC:EZL	1
17	PBDZZ	2840-00-492-4443	91547	1-100-496-03	...DISK,AXIAL COMPRESS 2ND STAGE,MAKE FROM P/N 1-100-496-09 UOC:EZL	1
18	PBDZZ	2840-00-492-4447	91547	1-100-497-01	...DISK,AXIAL COMPRESS 3RD STAGE,MAKE FROM P/N 1-100-497-07 UOC:EZL	1
19	PBDZZ	2840-00-492-4442	91547	1-100-498-01	...DISK,AXIAL COMPRESS 4TH STAGE,MAKE FROM P/N 1-100-498-07 UOC:EZL	1
20	PBDZZ	2840-00-492-4448	91547	1-100-499-03	...DISK,AXIAL COMPRESS 5TH STAGE,MAKE FROM P/N 1-100-499-08 UOC:EZL	1
21	PAFZZ	5315-01-038-1446	91547	1-300-268-02	..PIN,SPRING UOC:EZL	142

(1)	(2)	(3)	(4)	(5)	(6)	(7)
ITEM NO	SMR CODE	NSN	CAGEC	PART NUMBER	DESCRIPTION AND USABLE ON CODE (UOC)	QTY
22	PAOZZ	5340-00-181-1225	91547	1-100-505-02	..PLATE,MENDING UOC:EZL	142
23	PADZZ	2840-00-176-3752	91547	1-100-385-05	..BLADE,COMPRESSOR RO 5TH STAGE,FOR FIELD REPLACEMENT USE P/N 1-100-385-04 UOC:EZL	38
23	PAOZZ	2840-00-176-3789	91547	1-100-385-04	..BLADE SET,COMPRESSO 5TH STAGE,FIELD REPLACEMENT UOC:EZL	19
24	PADZZ	2840-00-176-3791	91547	1-100-384-05	..BLADE,COMPRESSOR RO 4TH STAGE,FOR FIELD REPLACEMENT USE P/N 1-100-384-04 UOC:EZL	36
24	PAOZZ	2840-00-176-3758	91547	1-100-384-04	..BLADE SET,COMPRESSO 4TH STAGE,FIELD REPLACEMENT UOC:EZL	18
25	PADZZ	2840-00-176-3756	91547	1-100-383-05	..BLADE,COMPRESSOR RO 3RD STAGE,FOR FIELD REPLACEMENT USE P/N 1-100-383-04 UOC:EZL	34
25	PAOZZ	2840-00-176-3773	91547	1-100-383-04	..BLADE SET COMPRESSO 3RD STAGE,FIELD REPLACEMENT UOC:EZL	17
26	PADZZ	2840-00-176-3782	91547	1-100-286-09	..BLADE,COMPRESSOR RO 2ND STAGE,FOR FIELD REPLACEMENT USE P/N 1-100-286-08 UOC:EZL	34
26	PAFZZ	2840-00-176-3759	91547	1-100-286-08	..BLADE SET,COMPRESSO 2ND STAGE,FIELD REPLACEMENT UOC:EZL	17
27	PADZZ	2840-00-176-3751	91547	1-100-501-01	.SHAFT,TURBINE,TURBI UOC:EZL	1
28	PADZZ	5306-00-177-5712	91547	1-100-502-02	.BOLT,EXTERNALLY UOC:EZL	16
29	PADZZ	5310-00-176-6179	91547	1-100-148-01	.WASHER,KEY UOC:EZL	16
30	PADZZ	2840-01-304-1058	91547	1-100-078-13	ROTOR,COMPRESSOR,GA UOC:EZL	1
31	PADZZ	5310-00-176-6179	91547	1-100-148-01	WASHER,KEY UOC:EZL	12
32	PADZZ	5306-00-177-5712	91547	1-100-502-02	BOLT,EXTERNALLY UOC:EZL	12
33	PAFZZ	5365-00-041-3420	91547	1-100-146-04	RING,OIL BEARING,DI UOC:EZL	1
34	PAFZZ	3110-01-382-6374	91547	1-300-665-01	BEARING,ROLLER,CYLI UOC:EZL	1
35	PAOZZ	5365-00-054-3579	91547	1-100-147-02	RING,COMPRESSOR BEA UOC:EZL	1
36	PAOZZ	5365-00-949-5495	91547	1-100-289-01	SPACER,RING 0.020 - 0.025 IN. THK UOC:EZL	V
36	PAOZZ	5365-00-948-8032	91547	1-100-289-02	SPACER,RING 0.030 - 0.035 IN. THK UOC:EZL	V
36	PAOZZ	5365-00-948-8031	91547	1-100-289-03	SPACER,RING 0.040 - 0.045 IN. THK UOC:EZL	V
37	PAOZZ	2840-00-924-7985	91547	1-110-132-01	CONE, COMPRESSOR TU UOC:EZL	1
38	PAOZZ	2840-00-945-5613	91547	1-100-131-01	TABWASHER,GAS PRODU UOC:EZL	3

(1)	(2)	(3)	(4)	(5)	(6)	(7)
ITEM NO	SMR CODE	NSN	CAGEC	PART NUMBER	DESCRIPTION AND USABLE ON CODE (UOC)	QTY
39	PAOZZ	5310-00-949-5488	91547	1-100-293-01	NUT,PLAIN,HEXAGON UOC:EZL	6
40	PAOZZ	5310-00-790-8116	91547	1-100-034-01	NUT,PLAIN,ROUND UOC:EZL	1
41	PAOZZ	2840-00-766-8645	91547	1-100-423-01	LOCKRING,COMPRSSOR UOC:EZL	1
42	PAOZZ	5365-00-437-4013	91547	1-110-141-02	RING,EXTERNALLY THR UOC:EZL	1
43	PAODD	2840-01-008-5983	91547	1-101-360-04	TURBINE ROTOR,TURBI ,SECOND STAGE,SEE FIG. 12 FOR BREAKDOWN UOC:EZL	1
44	PAFZZ	5365-00-947-6225	91547	1-100-294-03	SPACER,SLEEVE UOC:EZL	1
45	PAFDD	2840-01-334-9226	91547	1-101-530-01	TURBINE ROTOR,TURBI ,FIRST STAGE,PART OF P/N 1-100-720-47,SEE FIG. 13 FOR BREAKDOWN UOC:EZL	1
45	PAFDD	2840-01-031-8758	91547	1-100-880-12	TURBINE ROTOR,TURBI ,FIRST STAGE,PART OF P/N 1-100-720-51,SEE FIG. 13 FOR BREAKDOWN UOC:EZL	1
46	PAOZZ	5306-00-948-3236	91547	1-100-292-02	BOLT,EXTERNALLY REL UOC:EZL	6
47	PADDD	2840-00-943-2206	91547	1-100-800-04	SHAFT,TURBINE,TURBI UOC:EZL	1
48	PADZZ	4730-00-475-6950	91547	1-100-344-01	.PLUG,POWERSHAFT,ROT UOC:EZL	1
49	XADZZ		91547	1-100-449-01	.SHAFT END,FWD UOC:EZL	1
50	XADZZ		91547	1-100-099-01	.SHAFT END,REAR UOC:EZL	1

END OF FIGURE

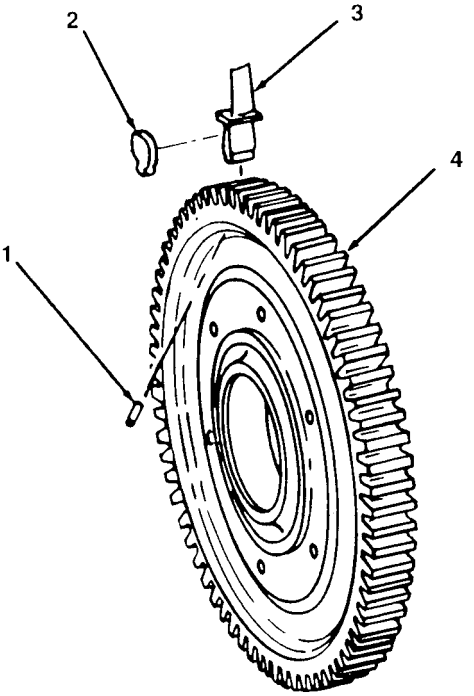

FIGURE 12. SECOND TURBINE ROTOR
(T53-L-13B)

(1) ITEM NO	(2) SMR CODE	(3) NSN	(4) CAGEC	(5) PART NUMBER	(6) DESCRIPTION AND USABLE ON CODE (UOC)	(7) QTY
					GROUP 0402 COMPRESSOR SECTION	
					FIG. 12 SECOND TURBINE ROTOR (T53-L-13B)	
1	PADZZ	5315-00-150-3635	91547	1-140-285-01	PIN,STRAIGHT,HEADLE UOC:EZL	66
2	PADZZ	2840-00-924-8551	91547	1-100-144-01	PLATE,SEALING,SECON UOC:EZL	66
3	PADZZ	2840-01-009-3719	91547	1-100-118-07	BLADE,TURBINE ROTOR UOC:EZL	66
4	PADZZ	2840-00-924-8521	91547	1-100-063-05	DISK,TURBINE,TURBIN UOC:EZL	1
					END OF FIGURE	

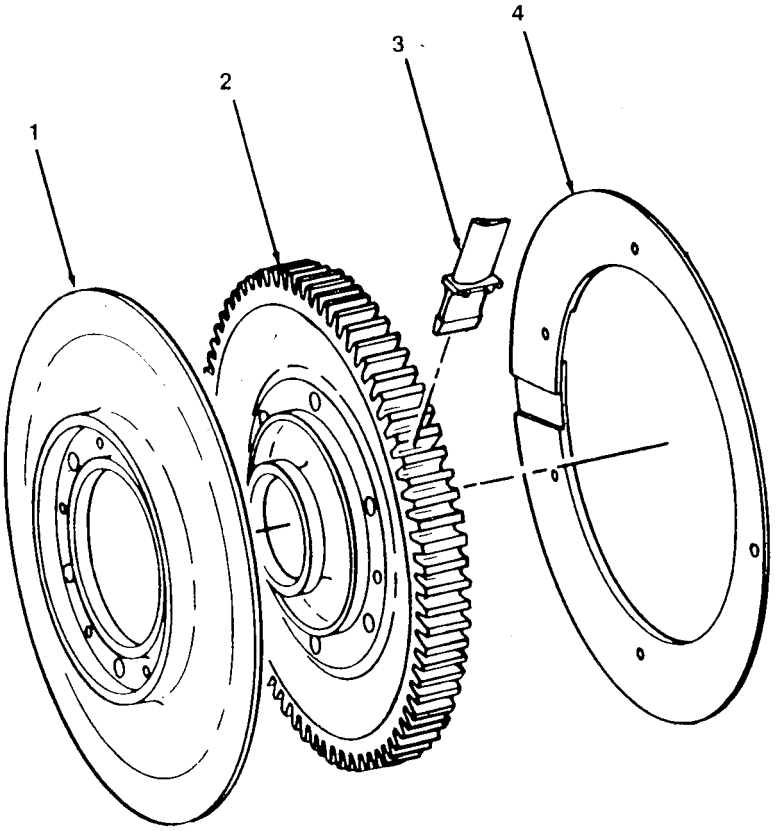

FIGURE 13. FIRST TURBINE ROTOR
(T53-L-13B)

(1) ITEM NO	(2) SMR CODE	(3) NSN	(4) CAGEC	(5) PART NUMBER	(6) DESCRIPTION AND USABLE ON CODE (UOC)	(7) QTY
					GROUP 0402 COMPRESSOR SECTION	
					FIG. 13 FIRST TURBINE ROTOR (T53-L-13B)	
1	PADZZ	2840-00-925-2972	91547	1-100-135-03	DISK,TURBINE ROTOR UOC:EZL	1
2	PADZZ	2840-00-924-7933	91547	1-100-133-01	DISK,TURBINE,TURBIN UOC:EZL	1
3	PADZZ	2840-01-337-6789	91547	1-100-563-01	BLADE,TURBINE ENGIN PART OF P/N 1-101-530-01 UOC:EZL	66
3	PADZZ	2840-01-029-8740	91547	1-100-132-06	BLADE PART OF P/N 1-100-880-12 UOC:EZL	66
4	PAOZZ	5365-00-957-9091	91547	1-100-890-03	RING ASSEMBLY,RETAI PART OF P/N 1-101-530-01 UOC:EZL	1
4	PADZZ	5365-01-329-7824	91547	1-100-890-07	RING,RETAINING PART OF P/N 1-100-880-12 UOC:EZL	1
					END OF FIGURE	

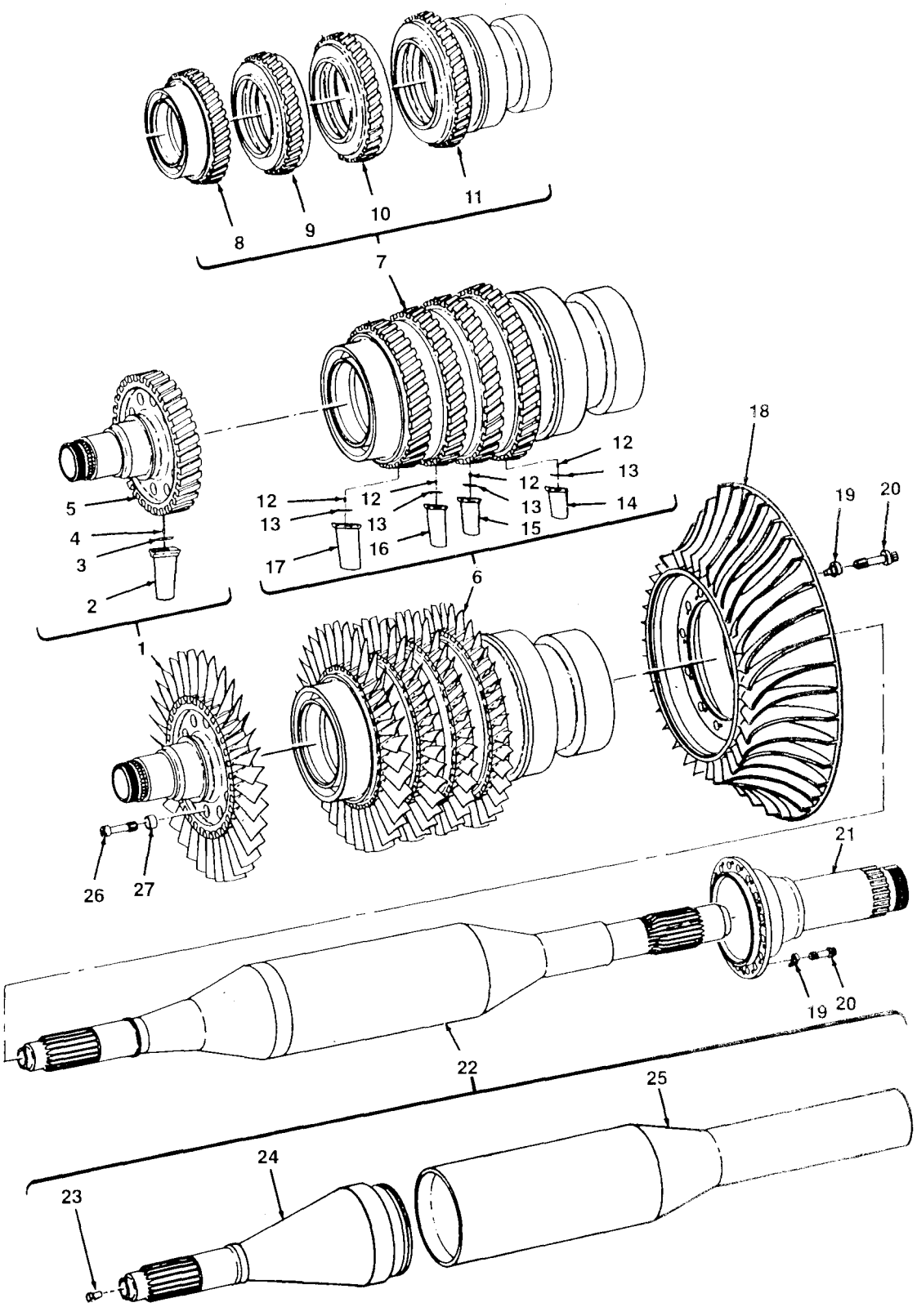

FIGURE 14. COMPRESSOR ROTOR ASSEMBLY
(T53-L-703)

(1) ITEM NO	(2) SMR CODE	(3) NSN	(4) CAGEC	(5) PART NUMBER	(6) DESCRIPTION AND USABLE ON CODE (UOC)	(7) QTY
					GROUP 0402 COMPRESSOR SECTION	
					FIG. 14 COMPRESSOR ROTOR ASSEMBLY (T53-L-703)	
1	ADDDD		91547	1-101-080-06	SHAFT ASSEMBLY UOC:EZP	1
2	PADZZ	2840-00-176-3780	91547	1-100-361-06	.BLADE,COMPRESSOR RO 1ST STAGE,FOR FIELD REPLACEMENT USE P/N 1-100-361-05 UOC:EZP	31
2	PAOZZ	2840-00-176-3788	91547	1-100-361-05	.BLADE SET,COMPRESSO 1ST STAGE,FIELD REPLACEMENT UOC:EZP	16
3	PAOZZ	5340-00-181-1225	91547	1-100-505-02	.PLATE,MENDING UOC:EZP	31
4	PAFZZ	5315-01-038-1446	91547	1-300-268-02	.PIN,SPRING UOC:EZP	31
5	PADZZ	2840-01-006-1118	91547	1-100-495-07	.DISK AND HUB,AXIAL UOC:EZP	1
6	ADDDD		91547	1-101-090-07	ROTOR ASSEMBLY UOC:EZP	1
7	PADDD	2840-01-154-7142	91547	1-101-250-04	.DISK AND HUB,GAS TU UOC:EZP	1
8	PBDZZ	2840-00-492-4443	91547	1-100-496-03	..DESK,AXIAL COMPRESS 2ND STAGE,MAKE FROM P/N 1-100-496-09 UOC:EZP	1
9	PBDZZ	2840-00-492-4447	91547	1-100-497-01	..DISK,AXIAL COMPRESS 3RD STAGE,MAKE FROM P/N 1-100-497-01 UOC:EZP	1
10	PBDZZ	2840-00-492-4442	91547	1-100-498-01	..DISK,AXIAL COMPRESS 4TH STAGE,MAKE FROM P/N 1-100-498-07 UOC:EZP	1
11	PBDZZ	2840-00-492-4448	91547	1-100-499-03	..DISK,AXIAL COMPRESS 5TH STAGE,MAKE FROM P/N 1-100-499-08 UOC:EZP	1
12	PAFZZ	5315-01-038-1446	91547	1-300-268-02	.PIN,SPRING UOC:EZP	142
13	PAOZZ	5340-00-181-1225	91547	1-100-505-02	.PLATE,MENDING UOC:EZP	142
14	PADZZ	2840-00-176-3752	91547	1-100-385-05	.BLADE,COMPRESSOR RO 5TH STAGE,FOR FIELD REPLACEMENT USE P/N 1-100-385-04 UOC:EZP	38
14	PAOZZ	2840-00-176-3789	91547	1-100-385-04	.BLADE SET,COMPRESSO 5TH STAGE,FIELD REPLACEMENT UOC:EZP	19
15	PADZZ	2840-00-176-3791	91547	1-100-384-05	.BLADE,COMPRESSOR RO 4TH STAGE,FOR FIELD REPLACEMENT USE P/N 1-100-384-04 UOC:EZP	36
15	PAOZZ	2840-00-176-3758	91547	1-100-384-04	.BLADE SET,COMPRESSO 4TH STAGE,FIELD REPLACEMENT UOC:EZP	18
16	PADZZ	2840-00-176-3756	91547	1-100-383-05	.BLADE,COMPRESSOR RO 3RD STAGE,FOR FIELD REPLACEMENT USE P/N 1-100-383-04 UOC:EZP	34

(1)	(2)	(3)	(4)	(5)	(6)	(7)
ITEM NO	SMR CODE	NSN	CAGEC	PART NUMBER	DESCRIPTION AND USABLE ON CODE (UOC)	QTY
16	PAOZZ	2840-00-176-3773	91547	1-100-383-04	.BLADE SET,COMPRESSO 3RD STAGE,FIELD REPLACEMENT UOC:EZP	17
17	PADZZ	2840-00-176-3782	91547	1-100-286-09	.BLADE,COMPRESSOR RO 2ND STAGE,FOR FIELD REPLACEMENT USE P/N 1-100-286-08 UOC:EZP	34
17	PAFZZ	2840-00-176-3759	91547	1-100-286-08	.BLADE SET,COMPRESSO 2ND STAGE,FIELD REPLACEMENT UOC:EZP	17
18	PADZZ	2840-01-304-1058	91547	1-100-078-13	ROTOR,COMPRESSOR,GA UOC:EZP	1
19	PADZZ	5310-00-176-6179	91547	1-100-148-01	WASHER,KEY UOC:EZP	28
20	PADZZ	5306-00-177-5712	91547	1-100-502-02	BOLT,EXTERNALLY UOC:EZP	28
21	PADZZ	2840-00-176-3751	91547	1-100-501-01	SHAFT,TURBINE,TURBI UOC:EZP	1
22	PADDD	2840-00-943-2206	91547	1-100-800-04	SHAFT,TURBINE,TURBI UOC:EZP	1
23	PADZZ	4730-00-475-6950	91547	1-100-344-01	.PLUG,POWERSHAFT,ROT UOC:EZP	1
24	XADZZ		91547	1-100-449-01	.SHAFT END,FWD UOC:EZP	1
25	XADZZ		91547	1-100-099-01	.SHAFT END REAR UOC:EZP	1
26	PADZZ	5306-00-177-5723	91547	1-100-506-02	BOLT,INTERNAL WRENC UOC:EZP	10
27	PADZZ	2840-00-769-9901	91547	1-080-028-02	RETAINER,BOLT UOC:EZP	10

END OF FIGURE

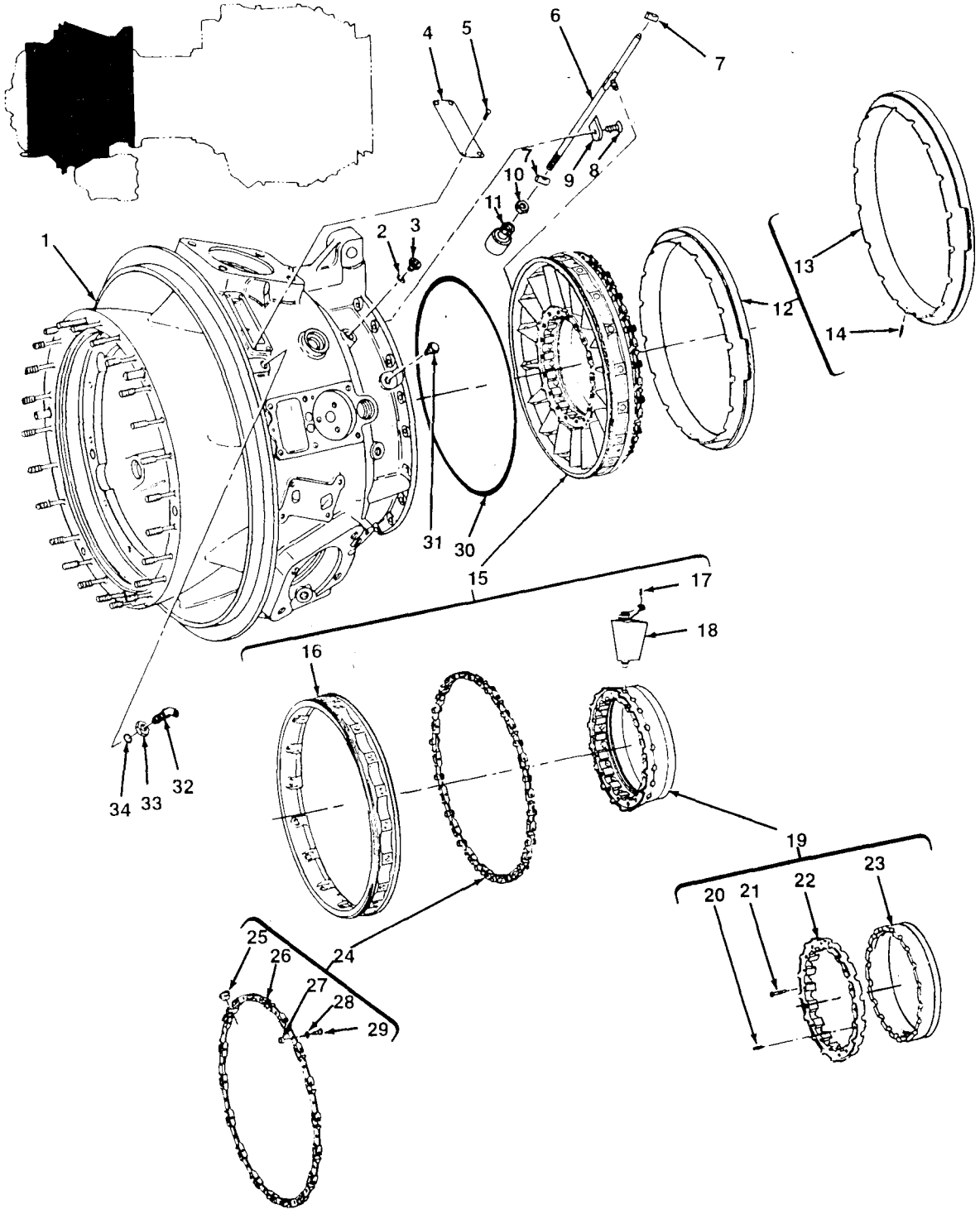

FIGURE 15. VARIABLE INLET GUIDE VANE ASSEMBLY, AIR INLET HOUSING AND RELATED PARTS

(1) ITEM NO	(2) SMR CODE	(3) NSN	(4) CAGEC	(5) PART NUMBER	(6) DESCRIPTION AND USABLE ON CODE (UOC)	(7) QTY
					GROUP 0402 COMPRESSOR SECTION	
					FIG. 15 VARIABLE INLET GUIDE VANE ASSEMBLY,AIR INLET HOUSING AND RELATED PARTS	
1	PADDD	2840-00-925-4186	91547	1-060-220-03	HOUSING ASSY,INLET ,AIR,SEE FIG. 16 FOR BREAKDOWN	1
2	PAFZZ	5330-00-166-0969	81349	M83248/1-010	PACKING,PREFORMED	2
3	PAFZZ	5365-00-289-3073	96906	MS9015-02	PLUG,MACHINE THREAD	2
4	PADZZ	9905-01-162-6974	91547	STD3094	PLATE,IDENTIFICATIO	1
5	PAFZZ	5305-00-253-5612	96906	MS21318-15	SCREW,DRIVE	4
6	PADZZ	5935-00-957-8984	91547	1-060-300-03	CONNECTOR ASSEMBLY,	1
7	PADZZ	2840-00-924-8003	91547	1-060-135-02	GUIDE,ACTUATOR ROD	2
8	PAFZZ	5305-00-781-5662	96906	MS24693C269	SCREW,MACHINE	1
9	PADZZ	2840-00-954-5890	91547	1-060-151-01	PLATE,SETTING,VANE	1
10	PAOZZ	5310-00-947-9858	91547	2-161-055-01	NUT,PLAIN,HEXAGON	1
11	PAOZZ	2840-00-904-2475	91547	1-300-345-01	BEARING,SELF-ALIGNI	1
12	PADZZ	2840-00-924-8007	91547	1-060-310-01	FAIRING ASSEMBLY,OU	1
13	XADZZ		91547	1-060-089-03	.FAIRING	1
14	PADZZ	5315-00-760-8219	91547	1-060-138-01	.PIN,STRAIGHT,HEADED	1
15	PAFDD	2840-00-924-3626	91547	1-060-270-05	VANE ASSEMBLY,STATO ,VARIABLE INLET GUIDE	1
16	PADZZ	2840-00-924-7626	91547	1-060-088-03	.FAIRING,INLET GUIDE	1
17	PADZZ	5315-01-074-0372	91547	1-300-637-01	.PIN,SPRING	18
18	PADZZ	2840-00-957-2536	91547	1-060-260-07	.VANE,COMPRESSOR STA	18
19	PADZZ	2840-00-957-6634	91547	1-060-250-03	.FAIRING ASSEMBLY,IN	1
20	PADZZ	5305-00-949-7863	88044	AN500AD5-8	..SCREW,MACHINE	15
21	XADZZ		91547	1-060-099-02	..PIN,STRAIGHT,HEADLE	3
22	XADZZ		91547	1-060-091-04	..FAIRING,INNER FORWA	1
23	XADZZ		91547	1-060-092-03	..FAIRING,INNER REAR	1
24	PADDD	2840-00-945-5617	91547	1-060-340-01	.UNISON RING ASSEMBL	1
25	PADZZ	3120-00-911-9184	91547	1-300-116-01	..BEARING,PLAIN,SELF-	1
26	XADZZ		91547	1-060-093-03	..UNISON RING,VARIABL	1
27	PADZZ	5310-00-913-4028	91547	1-060-097-01	..NUT,PLAIN,ROUND	17
28	PADZZ	2840-00-925-2976	91547	1-060-096-02	..ROLLER,UNISON RING	17
29	PADZZ	5305-00-952-7403	91547	1-060-095-01	..SCREW,SHOULDER	17
30	PADZZ	5330-01-138-1129	19207	12302369	PACKING,PREFORMED	1
31	PADZZ	5305-00-908-9765	91547	1-060-142-01	SETSCREW	1
32	PAOZZ	4730-00-725-4351	96906	MS24394D4	ELBOW,TUBE UOC:EZP	1
33	PAOZZ	5310-00-159-6339	88044	AN924-4D	NUT,PLAIN,HEXAGON UOC:EZP	1
34	PAOZZ	5330-00-020-0203	81349	M83248/1-904	PACKING,PREFORMED	1
					END OF FIGURE	

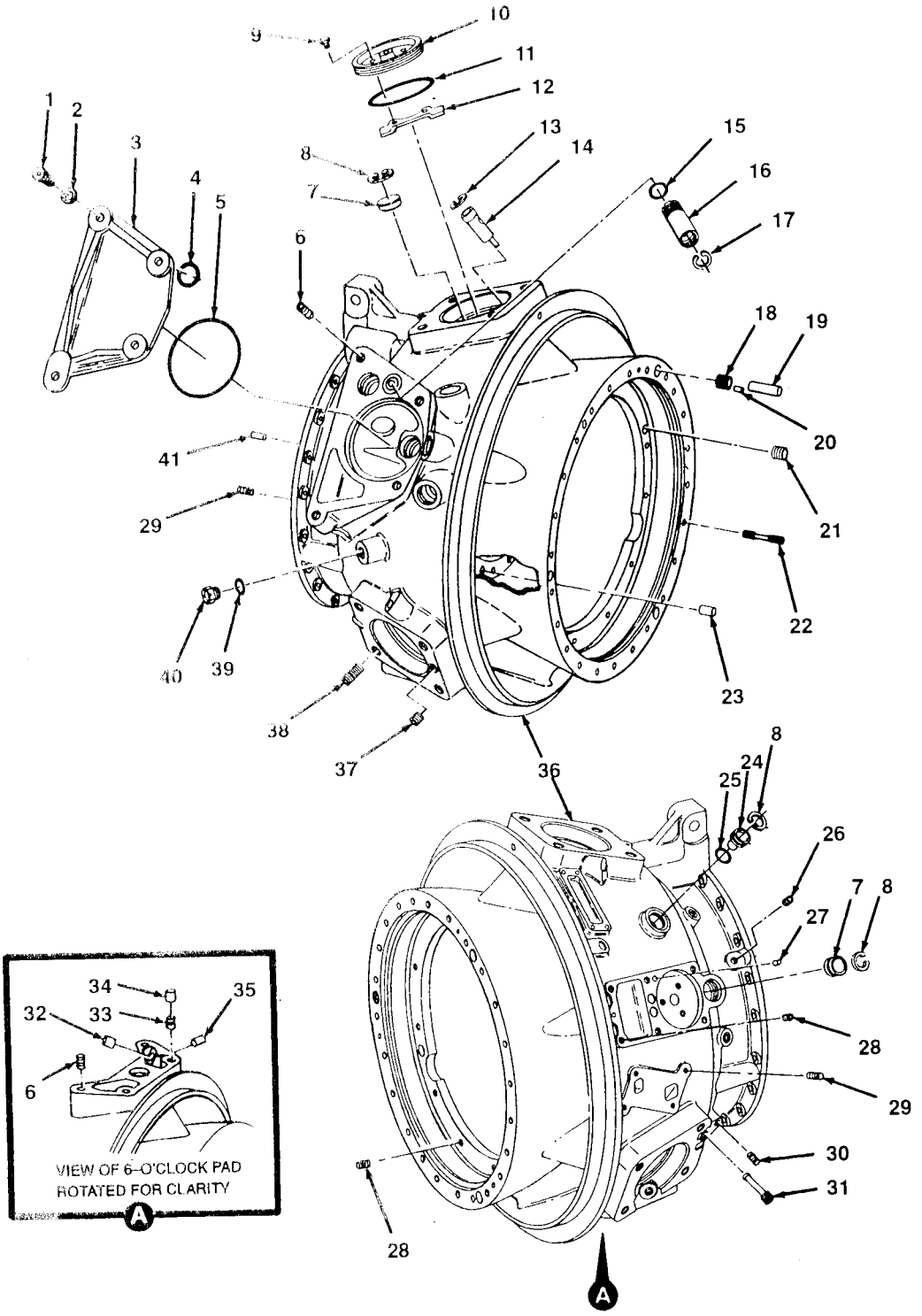

FIGURE 16. AIR INLET HOUSING ASSEMBLY

(1) ITEM NO	(2) SMR CODE	(3) NSN	(4) CAGEC	(5) PART NUMBER	(6) DESCRIPTION AND USABLE ON CODE (UOC)	(7) QTY
					GROUP 0402 COMPRESSOR SECTION	
					FIG. 16 AIR INLET HOUSING ASSEMBLY	
1	PAOZZ	5306-00-619-1807	88044	AN104011	BOLT,MACHINE	4
2	PAOZZ	5310-00-167-0837	88044	AN960-616L	WASHER,FLAT	4
3	PAOZZ	2840-00-787-2557	91547	1-060-112-03	COVER,STARTER AND P	1
4	PAFZZ	5330-00-166-0993	81349	M83248/1-017	PACKING,PREFORMED	1
5	PAOZZ	5330-00-165-1955	81349	M83248-1-237	PACKING,PREFORMED	1
6	PADZF	5340-00-291-3492	96906	MS124698	INSERT,SCREW THREAD	6
7	PADZZ	5340-00-736-8653	91547	1-060-106-04	PLUG,VENT	9
8	PADZZ	5365-00-721-4828	96906	MS16625-1102	RING,RETAINING	10
9	PAFZZ	5306-00-736-1041	91547	1-060-118-01	BOLT,MACHINE	6
10	PAFZZ	4730-00-895-9489	91547	1-060-109-03	PLUG,ENGINE MOUNTIN	3
11	PAOZZ	5330-00-165-1953	81349	M83248/1-235	PACKING,PREFORMED	3
12	PAFZZ	2840-00-878-6172	91547	1-060-119-02	PLATE,MOUNTING PAD	3
13	PAFZZ	5365-00-807-7968	96906	MS16625-1068	RING,RETAINING	5
14	PADZZ	4710-00-475-6968	91547	1-060-107-01	TUBE,AIR TRANSFER,I	5
15	PADZZ	5330-00-166-0969	81349	M83248/1-010	PACKING,PREFORMED	1
16	PAFZZ	2840-00-787-2555	91547	1-060-060-01	NOZZLE,LUBRICATING,	1
17	PAFZZ	5365-00-282-2431	96906	MS16625-3037	RING,RETAINING	1
18	PBDZZ	5340-00-604-1451	91547	1-060-115-01	INSERT,SCREW THREAD	3
19	PADZZ	5315-00-475-1933	91547	1-060-037-01	PIN,STRAIGHT,HEADLE	3
20	PADZZ	5315-00-276-6766	88044	AN122684	PIN,STRAIGHT,HEA	3
21	PADZZ	5340-00-598-5634	96906	MS124660	INSERT,SCREW THREAD	1
22	XADZZ		91547	STD3001B121	STUD	24
22	PAFZZ	5307-00-903-4865	91547	STD3001B121N	STUD,STEPPED 0.003 IN. OVERSIZE	24
22	PAFZZ	5307-00-903-4866	91547	STD3001B121P	STUD,STEPPED 0.007 IN. OVERSIZE	24
23	PBDZZ	5315-00-283-0850	88044	AN122730	PIN,STRAIGHT,HEADLE	1
24	PADZZ	5340-00-787-2558	91547	1-060-106-03	PLUG,VENT	1
25	PADZZ	5330-00-166-1001	81349	M83248/1-020	PACKING,PREFORMED	1
26	MDDZZ		91547	1-060-143-01	INSERT,SCREW THREAD	1
27	PADZZ	5315-00-241-2920	88044	AN122705	PIN,STRAIGHT,HEADLE	1
28	PADZZ	5340-00-290-4497	96906	MS124736	INSERT,SCREW THREAD	30
29	PADZZ	5340-00-597-3302	96906	MS124695	INSERT,SCREW THREAD	5
30	PADZZ	5340-00-986-2929	96906	MS124655	INSERT,SCREW THREAS	1
31	PADZZ	4730-00-102-8542	91547	1-060-154-01	PLUG,METERING	1
32	PADZZ	4730-01-122-3681	96906	MS27769D3	PLUG,PIPE	1
33	PADZZ	5340-00-290-4511	96906	MS124739	INSERT,SCREW THREAD	2
34	PAFZZ	5315-00-619-4150	91547	1-060-013-01	PIN,HOLLOW	2
35	PADZZ	4730-00-188-3493	88044	AN962D2	PLUG,PIPE	1
36	XADZZ		91547	1-060-102-03	HOUSING,INLET	1
37	PADZZ	4730-00-221-2134	88044	AN932D1	PLUG,PIPE	1
38	PADZZ	5340-01-011-6864	96906	MS124740	INSERT,SCREW THREAD	12
39	PAFZZ	5330-00-020-0203	81349	M83248-1-904	PACKING,PREFORMED	1
40	PAOZZ	5365-00-289-3019	96906	MS9015-04	PLUG,MACHINE THREAD	1
41	PADZZ	5315-00-927-5794	91547	1-060-098-02	PIN,STRAIGHT,HEADED	1

END OF FIGURE

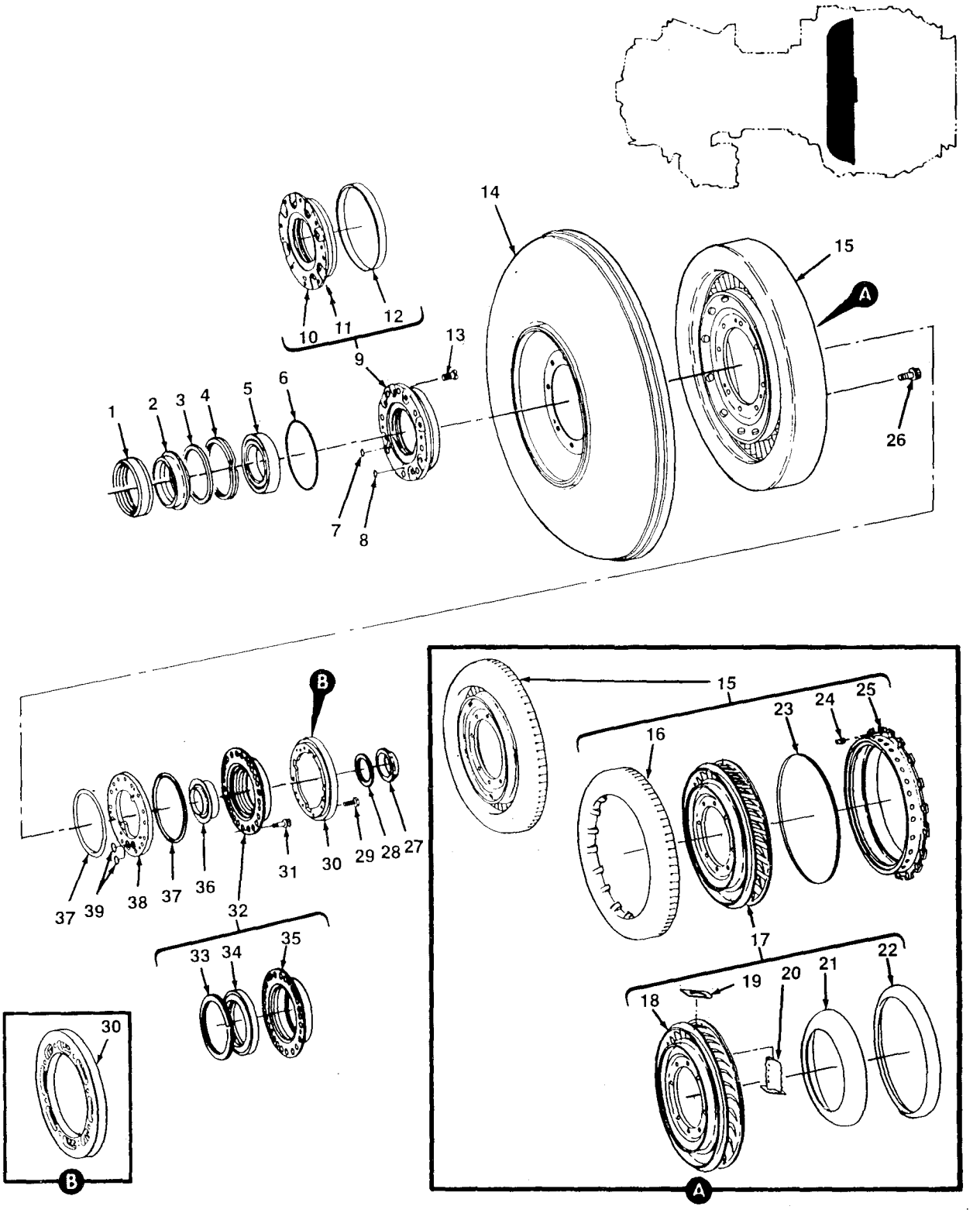

FIGURE 17. FIRST TURBINE NOZZLE, DEFLECTOR ASSEMBLY, REAR BEARING HOUSING, AND RELATED PARTS

(1) ITEM NO	(2) SMR CODE	(3) NSN	(4) CAGEC	(5) PART NUMBER	(6) DESCRIPTION AND USABLE ON CODE (UOC)	(7) QTY
					GROUP 0402 COMPRESSOR SECTION	
					FIG. 17 FIRST TURBING NOZZLE, DEFLECTOR ASSEMBLY, REAR BEARING HOUSING,AND RELATED PARTS	
1	PAOZZ	5330-01-100-9633	91547	1-300-173-02	SEAL,PLAIN ENCASED	1
2	PAFZZ	5365-00-041-3420	91547	1-100-146-04	RING,OIL BEARING,DI (T53-L-703) PART OF P/N 1-000-060-23 UOC:EZP	1
3	PAFZZ	5365-00-066-5279	91547	1-110-211-01	SPACER,RING	1
4	PAFZZ	5365-00-634-7076	91547	1-300-358-01	RING,RETAINING	1
5	PAFZZ	3110-01-382-6374	91547	1-300-665-01	BEARING,ROLLER,CYLI (T53-L-703) PART OF P/N 1-000-060-23 UOC:EZP	1
6	PAFZZ	5330-00-753-1064	91547	1-300-249-01	SEAL,METAL,RING	1
7	PAOZZ	5330-00-990-2853	96906	MS9202-015	GASKET	1
8	PAOZZ	5330-00-949-9271	96906	MS9373-017	GASKET	1
9	PAODD	2840-01-008-5734	91547	1-110-470-13	HOUSING,ANTIFRICTIO ,REAR BRG	1
10	XADZZ		91547	1-100-173-03	.HOUSING	1
11	XADZZ		96906	MS9486-24	.PIN,STRAIGHT,HEAD	2
12	PADZZ	2840-01-073-3841	91547	1-110-175-03	.SHROUD,BEARING HOUS	1
13	PAOZZ	5305-00-174-0593	88044	AN115408	SCREW,MACHINE	2
14	PAOZZ	2840-00-957-6580	91547	1-110-500-03	DEFLRCTOR ASSEMBLY	1
15	PAFDD	2840-00-570-9803	91547	1-110-520-19	NOZZLE,TURBING,TURB (T53-L-13B) PART OF P/N 1-000-060-22,MAKE FROM P/N 1-110-520-20 UOC:EZL	1
15	PAFDD	2840-01-008-5985	91547	1-100-710-06	NOZZLE,TURBING,TURB (T53-L-703) PART OF P/N01-000-060-23 UOC:EZP	1
16	PAFZZ	2840-01-008-5984	91547	1-110-162-06	.CHAMBER,COMBUSTION, PART OF P/N 1-110-710-06 UOC:EZP	1
17	ZADDD		91547	1-110-710-07	.NOZZLE PART OF P/N 1-110-710-06 UOC:EZP	1
18	XAFDD		91547	1-110-257-02	..NOZZLE UOC:EZP	1
19	XAFZZ		91547	1-110-223-03	..WASHER UOC:EZP	50
20	PADZZ	2840-01-254-1014	91547	1-110-620-01	..INSERT ASSEMBLY,NOZ UOC:EZP	50
21	XAOZZ		91547	1-110-165-02	..SUPPORT,DEFLECTOR,T UOC:EZP	1
22	PADZZ	2840-00-253-1667	91547	1-110-164-03	..DEFLRCTOR,TURBING N UOC:EZP	1
23	MDDZZ		91547	1-110-259-02	.STRIP FILLER PART OF P/N 1-110-710-06,0.014 - 0.016 IN. THK. UOC:EZP	1
24	PADZZ	5310-01-016-3541	83324	RZA12203-1	.NUT,PLAIN,SPLINE PART OF P/N 1-110-710-06 UOC:EZP	20
25	PADZZ	2840-01-008-5954	91547	1-110-255-06	.FLANGE,TURBING NOZZ PART OF P/N 1-110-710-06 UOC:EZP	1
26	PAOZZ	5306-00-852-8036	96906	MS9171-10	BOLT,MACHINE	8

(1)	(2)	(3)	(4)	(5)	(6)	(7)
ITEM NO	SMR CODE	NSN	CAGEC	PART NUMBER	DESCRIPTION AND USABLE ON CODE (UOC)	QTY
27	PAOZZ	2840-00-924-7985	91547	1-110-132-01	CONE, COMPRESSOR TU (T53-L-703) PART OF P/N 1-000-060-23 UOC:EZP	1
28	PAOZZ	5365-00-949-5495	91547	1-100-289-01	SPACER,RING (T53-L-703) PART OF P/N 1-000-060-23,0.020 - 0.025 IN. THK. UOC:EZP	V
28	PAOZZ	5365-00-948-8032	91547	1-100-289-02	SPACER,RING (T53-L-703) PART OF P/N 1-000-060-23,0.030 - 0.035 IN. THK. UOC:EZP	V
28	PAOZZ	5365-00-948-8031	91547	1-100-289-03	SPACER,RING (T53-L-703) PART OF P/N 1-000-060-23,0.040 - 0.045 IN. THK. UOC:EZP	V
29	PAOZZ	5306-00-457-9896	91547	1-110-137-01	BOLT,MACHINE (T53-L-13B) PART OF P/N 1-000-060-22 UOC:EZL	8
29	PAOZZ	5306-01-083-1581	19207	12286994-3	BOLT,MACHINE (T53-L-703) PART OF P/N 1-000-060-23 UOC:EZP	8
30	PAOZZ	2840-01-308-5669	91547	1-110-398-01	SEAL,METALLIC,SPECI (T53-L-13B) PART OF P/N 1-000-060-22 UOC:EZL	1
30	PAOZZ	2840-01-008-5951	91547	1-110-376-08	RING,GAS PRODUCER S (T53-L-703) PART OF P/N 1-000-060-23 UOC:EZP	1
31	PAOZZ	5306-00-948-3243	91547	1-140-157-02	BOLT,MACHINE (T53-L-13B) PART OF P/N 1-000-060-22 UOC:EZL	3
31	PAOZZ	5305-00-271-3550	88044	AN115410	SCREW,MACHINE (T53-L-703) PART OF P/N 1-000-060-23 UOC:EZP	3
32	AFOFF		91547	1-110-720-02	RETAINER AND SEAL	1
33	PAOZZ	5365-00-837-9844	91547	1-300-359-01	.RING,RETAINING	1
34	PAOZZ	5330-01-010-1085	91547	1-300-616-01	.SEAL,PLAIN ENCASED	1
35	PAOZZ	5330-01-009-5339	91547	1-110-252-03	.RETAINER,OIL SEAL	1
36	PAOZZ	5365-00-054-3579	91547	1-100-147-02	RING,COMPRESSOR BEA (T53-L-703) PART OF P/N 1-000-060-23 UOC:EZP	1
37	PAOZZ	5330-00-937-2547	91547	1-300-315-01	GASKET	2
38	PAOZZ	3110-01-011-2093	91547	1-110-181-10	PLATE,RETAINING,BEA	1
39	PAOZZ	5330-00-929-5816	96906	MS9371-07	GASKET	2

END OF FIGURE

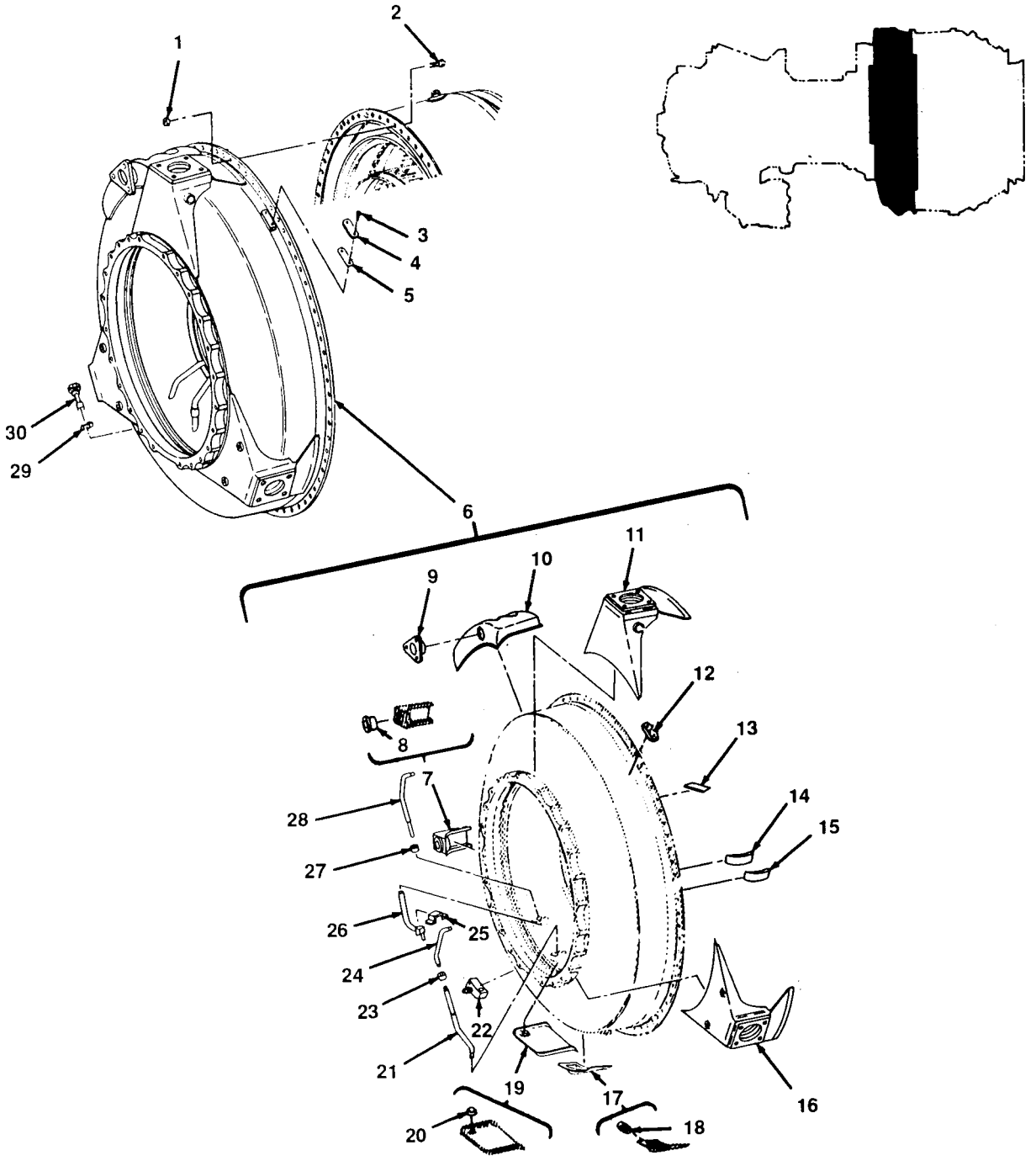

FIGURE 18. DIFFUSER HOUSING ASSEMBLY

(1) ITEM NO.	(2) SMR CODE	(3) NSN	(4) CAGEC	(5) PART NUMBER	(6) DESCRIPTION AND USABLE ON CODE (UOC)	(7) QTY
					GROUP 0402 COMPRESSOR SECTION	
					FIG. 18 DIFFUSER HOUSING ASSEMBLY	
1	PAOZZ	5310-00-844-3302	96906	MS21043-3	NUT,SELF-LOCKING,EX	72
2	PAOZZ	5306-00-838-1618	96906	MS9489-08	BOLT,MACHINE	72
3	PAOZZ	5305-00-939-9221	96906	MS35275-241	SCREW,MACHINE	4
4	PAOZZ	2840-00-792-6470	91547	1-110-073-01	PLATE,PROBE,DIFFUSE	2
5	PAOZZ	5330-01-398-5812	91547	1-110-072-01	NON-ASBESTOS GASKET	2
6	PADDD	2840-01-010-5826	91547	1-110-230-15	HOUSING,DIFFUSER MAKE PROM P/N 1-110-230-09	1
7	PADZZ	2840-00-925-4145	91547	1-110-250-02	.PAN ASSEMBLY,AIR OU PART OF P/N 1-110-230-09	1
8	PAFZZ	2840-01-011-2007	91547	1-110-089-02	..BOSS,DIFFUSER,INTER	1
9	PADZZ	2840-00-924-8636	91547	1-110-109-03	.ADAPTER,AIR BLEED	1
10	PADZZ	2840-00-942-7304	91547	1-110-103-04	.MANIFOLD,AIR BLEED PART OF P/N 1-110-230-09	1
11	PADZZ	2840-00-925-4153	91547	1-110-130-04	.MOUNT,ENGINE HOIST PART OF P/N 1-110-230-09	1
12	PADZZ	2840-00-456-0906	91547	1-110-023-02	.PLATE,MOUNTING PROB PART OF P/N 1-110-230-09	2
13	PADZZ	2840-00-446-8909	91547	1-110-051-02	.VANE,DIFFUSER HOUSI PART OF P/N 1-110-230-09	28
14	XDDZZ		91547	1-110-121-02	.VANE,DIFFUSER GUIDE PART OF P/N 1-110-230-09	36
15	PADZZ	2840-00-234-7226	91547	1-110-052-02	.VANE,DIFFUSER GUIDE PART OF P/N 1-110-230-09	8
16	PADZZ	2840-00-925-4159	91547	1-110-120-03	.MOUNT,ENGINE HOIST PART OF P/N 1-110-230-09	2
17	PADDD	2840-00-731-5335	91547	1-110-100-07	.MANIFOLD,OUTER DIFF PART OF P/N 1-110-230-09	1
18	PADZZ	2840-00-922-5845	91547	1-110-216-01	..UNION,MANIFOLD	1
19	PADZZ	2840-00-234-7225	91547	1-110-610-01	.COWL,MANIFOLD,AIR D PART OF P/N 1-110-230-09	1
20	PBDZZ	2840-00-010-7864	91547	1-110-215-01	..FITTING,COWL,DIFFUS	1
21	PADZZ	4710-00-731-5495	91547	1-110-214-01	.TUBE,BENT,METALLIC PART OF P/N 1-110-230-09	1
22	PADZZ	2840-00-924-7807	91547	1-110-011-04	.CONNECTOR,OIL INLET PART OF P/N 1-110-230-09	1
23	PADZZ	2840-00-731-5371	91547	1-110-219-01	.SLEEVE,OIL DRAIN TU PART OF P/N 1-110-230-09	1
24	PADZZ	4710-00-727-4563	91547	1-110-218-01	.TUBE,BENT,METALLIC PART OF P/N 1-110-230-09	1
25	PADZZ	5340-00-971-6245	91547	1-110-093-03	.BRACKET,AIR DIFFUSE PART OF P/N 1-110-230-09	1
26	PADZZ	4710-00-931-8269	91547	1-110-110-06	.TUBE ASSEMBLY,OIL I PART OF P/N 1-110-230-09	1
27	PADZZ	5365-00-945-3902	91547	1-110-309-02	.SPACER,SLEEVE PART OF P/N 1-110-230-09	1
28	PADZZ	4710-00-925-4156	91547	1-110-301-03	.TUBE,OIL INLET,SUPP PART OF P/N 1-110-230-09	1
29	PAOZZ	5330-00-868-8858	91547	1-110-197-01	GASKET	1
30	PAOZZ	4730-00-888-4754	91547	1-110-114-08	BOLT,FLUID PASSAGE	1

END OF FIGURE

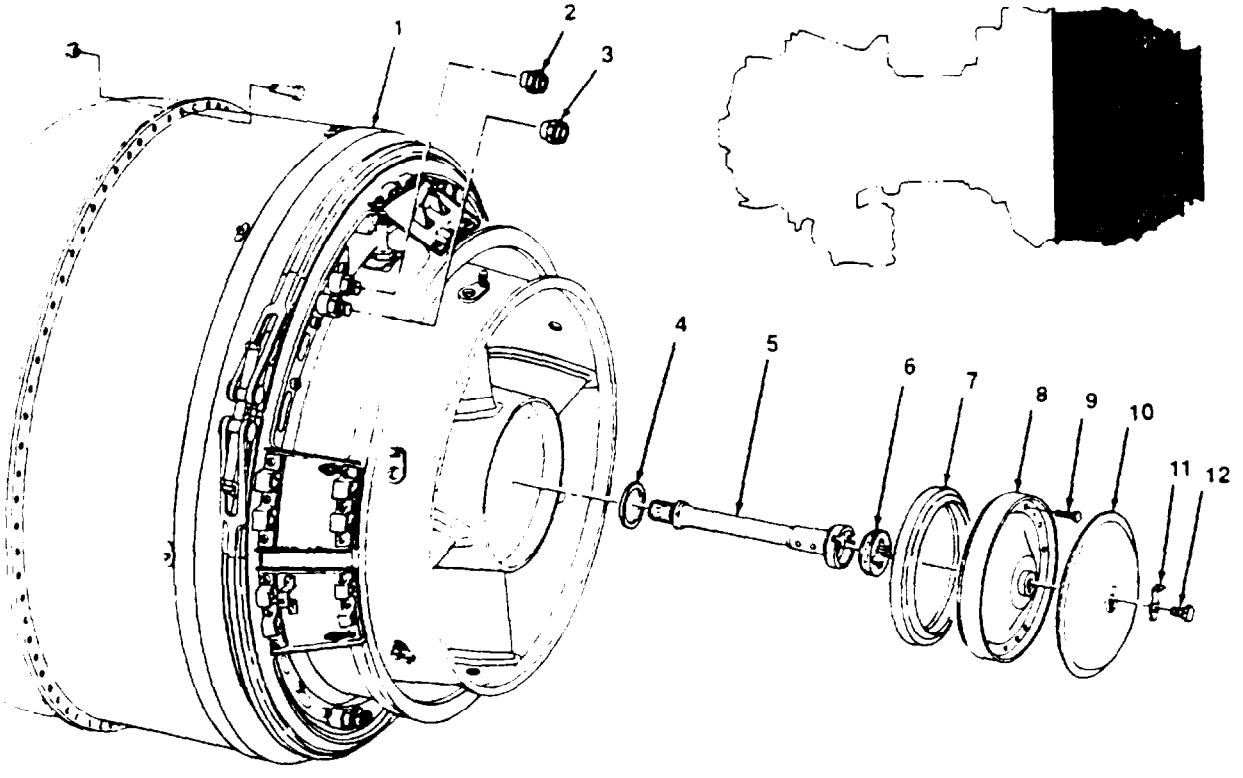

FIGURE 19. COMBUSTOR TURBINE ASSEMBLY AND RELATED PARTS

(1) ITEM NO	(2) SMR CODE	(3) NSN	(4) CAGEC	(5) PART NUMBER	(6) DESCRIPTION AND USABLE ON CODE (UOC)	(7) QTY
					GROUP 0403 COMBUSTER TURBINE SECTION	
					FIG. 19 COMBUSTOR TURBINE ASSEMBLY AND RELATED PARTS	
1	ADDD		91547	1-130-630-08	TURBINE COMBUSTOR A (T53-L-13B) PART OF P/N 1-000-060-22,SEE FIG. 20,21,22,24,AND 25 FOR BREAKDOWN UOC:EZL	1
1	ADDDD		91547	1-130-630-22	TURBINE COMBUSTOR A (T53-L-13B) PART OF P/N 1-000-060-22,SEE FIG. 20,21,22,24,AND 25 FOR BREAKDOWN UOC:EZL	1
1	ADDDD		91547	1-130-630-19	COMBUSTOR (T53-L-703) PART OF P/N 1-000-060-23,SEE FIG. 20,21,22,23,24,AND 25 FOR BREAKDOWN. UOC:EZP	1
2	PAOZZ	4730-00-939-8492	96906	MS9314-04	CAP,TUBE UOC:EZP	2
3	PAOZZ	4730-00-933-0924	96906	MS9314-03	CAP,TUBE UOC:EZP	2
4	PAOZZ	5365-00-766-8651	91547	1-140-217-01	SPACER,RING 0.010 - 0.020 IN. THK.	V
4	PAOZZ	5365-00-775-2510	91547	1-140-217-02	SPACER,RING 0.030. - 0.040 IN. THK.	V
4	PAOZZ	5365-00-796-9776	91547	1-140-217-03	SPACER,RING 0.050 - 0.070 IN. THK	V
4	PAOZZ	5365-00-103-5870	91547	1-140-217-04	SPACER,RING 0.115 - 0.135 IN. THK.	V
5	PAOZZ	3040-00-943-0054	91547	1-140-067-14	SHAFT,SHOULDERED	1
6	PAOZZ	5365-00-156-8958	91547	1-140-233-02	RING,EXTERNALLY THR	1
7	PAOZZ	5330-00-253-1722	91547	1-300-462-01	SEAL,RETAINER	1
8	PAOZZ	2840-00-925-7012	91547	1-140-640-03	COVER ASSEMBLY,TURB	1
9	PAOZZ	5306-01-083-1581	91547	STD3061-07	BOLT,MACHINE	10
10	PAOZZ	2840-00-945-8225	91547	1-140-182-01	COVER,EXHAUST DIFFU	1
11	PAOZZ	5310-00-089-7208	91547	1-160-635-01	WASHER,SPECIAL	1
12	PAOZZ	5306-00-446-6471	91547	1-150-059-01	BOLT,MACHINE	1
					END OF FIGURE	

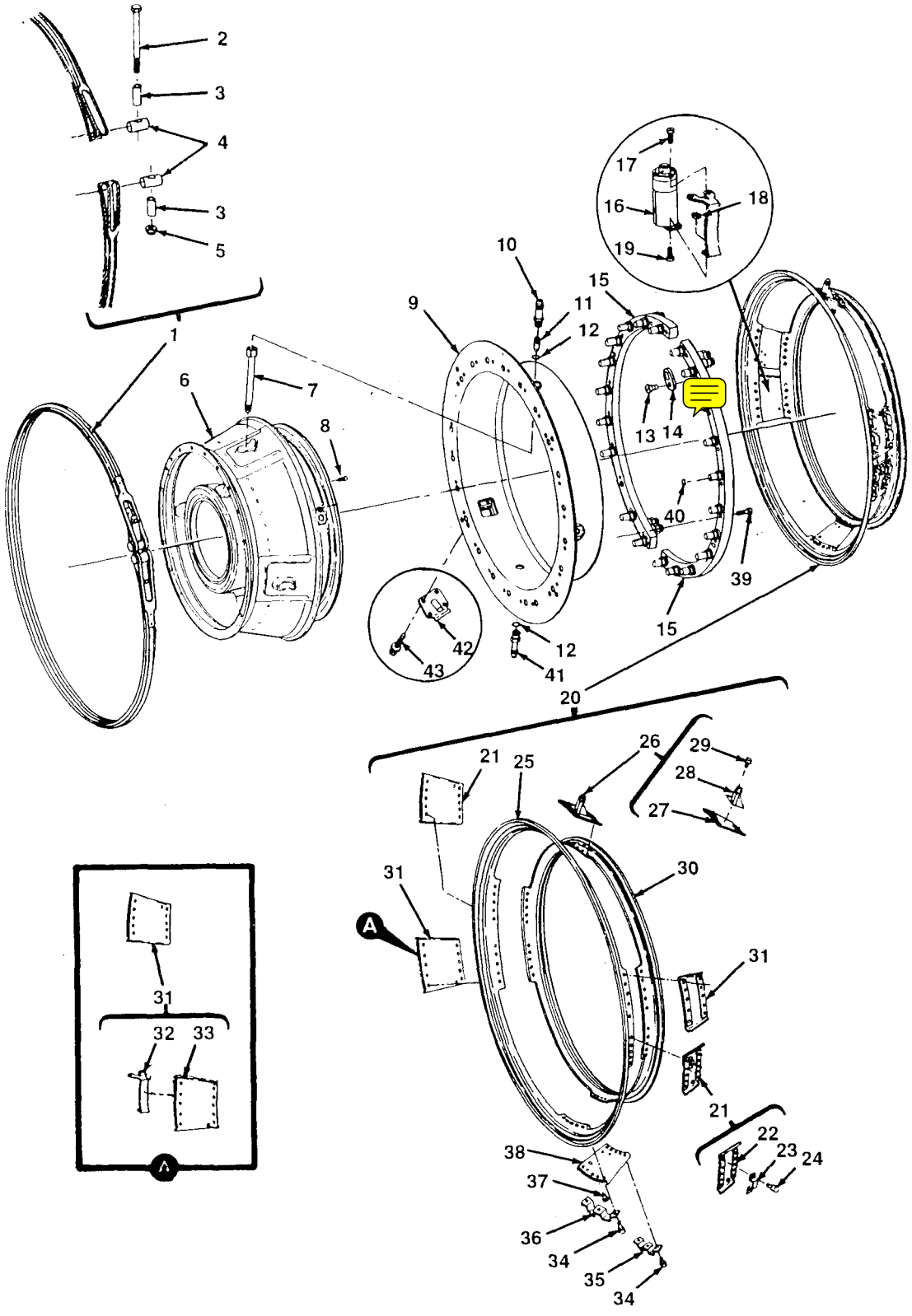

FIGURE 20. FIRE SHIELD, EXHAUST DIFFUSER SUPPORT CONE, FUEL MANIFOLD, EXHAUST DIFFUSER ASSEMBLY, AND RELATED PARTS

(1) ITEM NO	(2) SMR CODE	(3) NSN	(4) CAGEC	(5) PART NUMBER	(6) DESCRIPTION AND USABLE ON CODE (UOC)	(7) QTY
					GROUP 0403 COMBUSOT TURBING SECTION	
					FIG. 20 FIRE SHIELD,EXHAUST DIFFUSER SUPPORT CONE,FUEL MANIFOLD, EXHAUST DIFFUSER ASSEMBLY, AND RELATED PARTS	
1	PAFFF	2840-00-858-8592	91547	1-300-239-01	COUPLING ASSEMBLY,V	1
2	PAOZZ	5306-00-886-1453	94581	TS5210S4-5	.BOLT,MACHINE	1
3	PAOZZ	5365-00-856-7789	94581	214S5-82	.SPACER,SLEEVE	2
4	PAOZZ	2840-00-821-2759	94581	201B5-887	.TRUNNION	2
5	PAOZZ	5310-00-198-4759	72962	Z1200-054	.NUT,SELF-LOCKING,HE	1
5	PAOZZ	5310-00-275-0787	0AHP5	6085D14	.NUT,SELF-LOCKING,HE	1
6	PAODD	2840-01-009-3366	91547	1-150-240-06	DIFFUSER,EXHAUST SEE FIG. 21 FOR BREAKDOWN	1
7	PAOZZ	4710-00-862-4862	91547	1-150-005-02	TUBE,POWER TURBINE	2
8	PAOZZ	5305-00-071-1320	96906	MS51960-63	SCREW,MACHINE	2
9	PAOZZ	2840-00-942-6230	91547	1-150-250-02	SHIELD,HEAT,TURBINE (T53-L-13B) PART OF P/N 1-130-630-08 AND 1-130-630-22 UOC:EZL	1
9	PAOZZ	2840-01-008-7890	91547	1-150-250-08	SHIELD,HEAT,TURBINE (T53-L-703) PART OF P/N 1-130-630-19 UOC:EZP	1
10	PAOZZ	4730-00-942-7073	91547	1-150-108-01	ADAPTER,STRAIGHT,FL	1
11	PAOZZ	2840-00-105-3011	91547	1-150-107-03	STRAINER,OIL,POWER	1
12	PAOZZ	5330-00-020-0186	81349	M83248/1-906	PACKING REFORMED	2
13	PAOZZ	5305-00-410-9355	96906	MS24693C247	SCREW,MACHINE	4
14	PAFZZ	5330-00-878-5939	91547	~~1-130-236-01~~	GASKET	4
15	PAODD	2840-00-960-0174	91547	1-130-730-02	MANIFOLD ASSEMBLY,C SEE FIG. 45 FOR BREAKDOWN	2
16	PAOZZ	6685-01-010-5942	50625	440510	CONNECTOR,THERMOCOU (T53-L-703) PART OF P/N 1-130-630-19 UOC:EZP	1
17	PAOZZ	5305-00-914-3809	96906	MS35276-212	SCREW,MACHINE (T53-L-703) PART OF P/N 1-130-630-19 UOC:EZP	3
18	PAOZZ	5310-00-878-7196	96906	MS21043-08	NUT,SELF-LOCKING,EX (T53-L-703) PART OF P/N 1-130-630-19 UOC:EZP	3
19	PAOZZ	5305-00-939-9230	96906	MS35275-243	SCREW,MACHINE (T53-L-703) PART OF P/N 1-130-630-19 UOC:EZP	2
20	PAODD	2840-00-943-2411	91547	1-150-260-02	CONE,EXHAUST,TURBIN (T53-L-13B) PART OF P/N 1-130-630-08 AND 1-130-630-22 UOC:EZL	1
20	PAODD	2840-01-008-5733	91547	1-150-260-08	CONE,EXHAUST,TURBIN (T53-L-703) PART OF P/N 1-130-630-19 UOC:EZP	1
21	PAOZZ	2840-00-925-8026	91547	1-150-280-07	.SUPPORT ASSEMBLY,DI	2
22	XAOZZ		91547	1-150-280-04	..SUPPORT ASSEMBLY	1
23	XAOZZ		91547	1-150-360-02	..BRACKET ASSEMBLY	1
24	PADZZ	5320-00-819-5690	96906	MS20613-3C3	..RIVET,SOLID	4
25	XAOZZ		91547	1-150-116-03	.FLANGE,TURBING SUPP	1
26	PAOZZ	2840-00-925-8025	91547	1-150-280-06	.SUPPORT ASSEMBLY,DI	1
27	PAOZZ	2840-01-271-8434	91547	1-150-280-02	..SUPPORT,SUBASSEMBLY	1
28	XAOZZ		91547	1-150-042-03	..BRACKET	1

(1)	(2)	(3)	(4)	(5)	(6)	(7)
ITEM NO	SMR CODE	NSN	CAGEC	PART NUMBER	DESCRIPTION AND USABLE ON CODE (UOC)	QTY
29	PADZZ	5320-00-819-5690	96906	MS20613-3C3	..RIVET,SOLID	4
30	XAOZZ		91547	1-150-117-03	.FLANGE,TURBINE SUPP	1
31	PAOZZ	2840-00-925-9986	91547	1-150-280-05	.SUPPORT ASSEMBLY,DI PART OF P/N 1-150-260-02 UOC:EZL	2
31	PAOZZ	2840-00-925-9986	91547	1-150-280-05	.SUPPORT ASSEMBLY,DI PART OF P/N 1-150-260-08 UOC:EZP	1
31	PAOOO	2840-01-009-3369	91547	1-150-280-13	.BRACKET AND SUPPORT PART OF P/N 1-150-260-08 UOC:EZP	1
32	XAOZZ		91547	1-150-410-02	..BRACKET ASSY PART OF P/N 1-150-280-13 UOC:EZP	1
33	PAOZZ	2840-00-925-9986	91547	1-150-280-05	..SUPPORT ASSEMBLY,DI PART OF P/N 1-150-280-13 UOC:EZP	1
34	PAOZZ	5305-00-055-2797	96906	MS24673-9	.SCREW,CAP,SOCKET HE	36
35	PAOZZ	2840-00-944-2516	91547	1-150-122-01	.PLATE,RETAINER,DIFF	6
36	PAOZZ	2840-00-925-7332	91547	1-150-119-01	.PLATE,RETAINER,DIFF	6
37	PAOZZ	5315-00-957-7584	91547	1-150-123-02	.PIN,STRAIGHT,HEADED	24
38	PAOZZ	2840-00-925-9967	91547	1-150-280-03	.SUPPORT ASSEMBLY,DI	1
39	PAOZZ	5306-01-013-3974	91547	STD3061-12	BOLT,MACHINE	22
39	PAOZZ	5305-00-935-7521	80205	NAS1351C4H14	SCREW,CAP,SOCKET HE	22
40	PAOZZ	5330-00-975-0245	80254	1-300-151-01	SEAL,PLAIN	22
41	PAFZZ	4730-00-670-7339	91547	1-150-006-01	CONNECTOR,OIL TUBE	1
42	PAOZZ	2840-01-008-5688	91547	1-150-400-02	COVER,COMBUSTION CH (T53-L-703) PART OF P/N 1-130-630-19 UOC:EZP	1
43	PAOZZ	5305-01-015-7088	96906	MS9564-02	SCREW,MACHINE (T53-L-703) PART OF P/N 1-130-630-19 UOC:EZP	2

END OF FIGURE

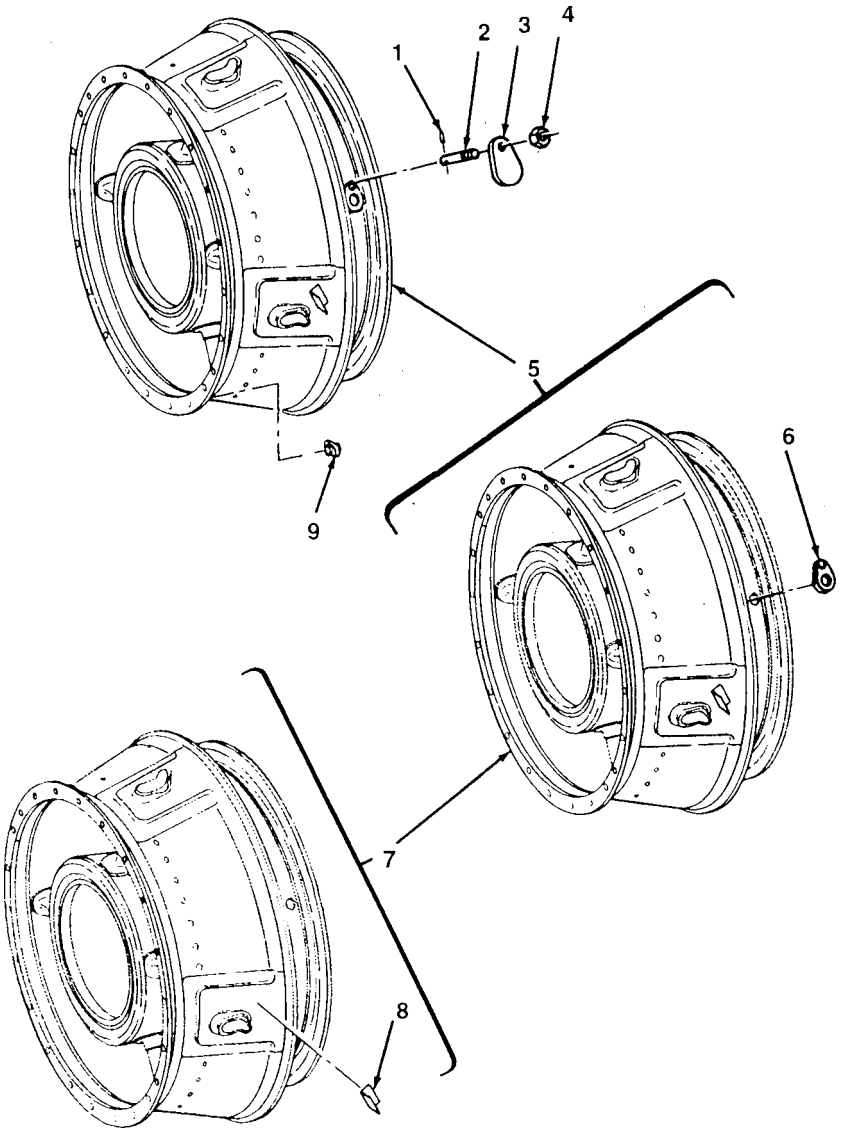

FIGURE 21. EXHAUST DIFFUSER ASSEMBLY

(1)	(2)	(3)	(4)	(5)	(6)	(7)
ITEM NO	SMR CODE	NSN	CAGEC	PART NUMBER	DESCRIPTION AND USABLE ON CODE (UOC)	QTY
					GROUP 0403 COMUSTOR TURBINE SECTION	
					FIG. 21 EXHAUST DIFFUSER ASSEMBLY	
1	PAFZZ	5315-00-013-8505	91547	1-140-023-06	PIN,STRAIGHT,HEADLE	6
2	PAFZZ	5307-00-091-9220	91547	1-150-007-02	STUD,CONTINUOUS THR	6
3	PAFZZ	2840-01-012-5726	91547	1-160-051-03	PLATE,COVER,THERMOC	6
4	PAOZZ	5310-00-844-4872	96906	MS21043-4	NUT,SELF-LOCKING,EX	6
5	XAFZZ		91547	1-150-230-09	DIFFUSER MAKE FROM P/N 1-150-230-05	1
6	PADZZ	6685-00-928-4063	91547	1-150-077-03	.ADAPTER,THERMOCOUPL PART OF P/N 1-150-230-05	6
7	XAFZZ		91547	1-150-220-02	.CONE ASSY PART OF P/N 1-150-230-05	1
8	PADZZ	5340-00-036-9204	91547	1-150-086-01	..BRACKET,ANGLE	2
9	PAFZZ	5310-00-832-8289	91547	1-300-086-01	NUT,SELF-LOCKING,RO	22
					END OF FIGURE	

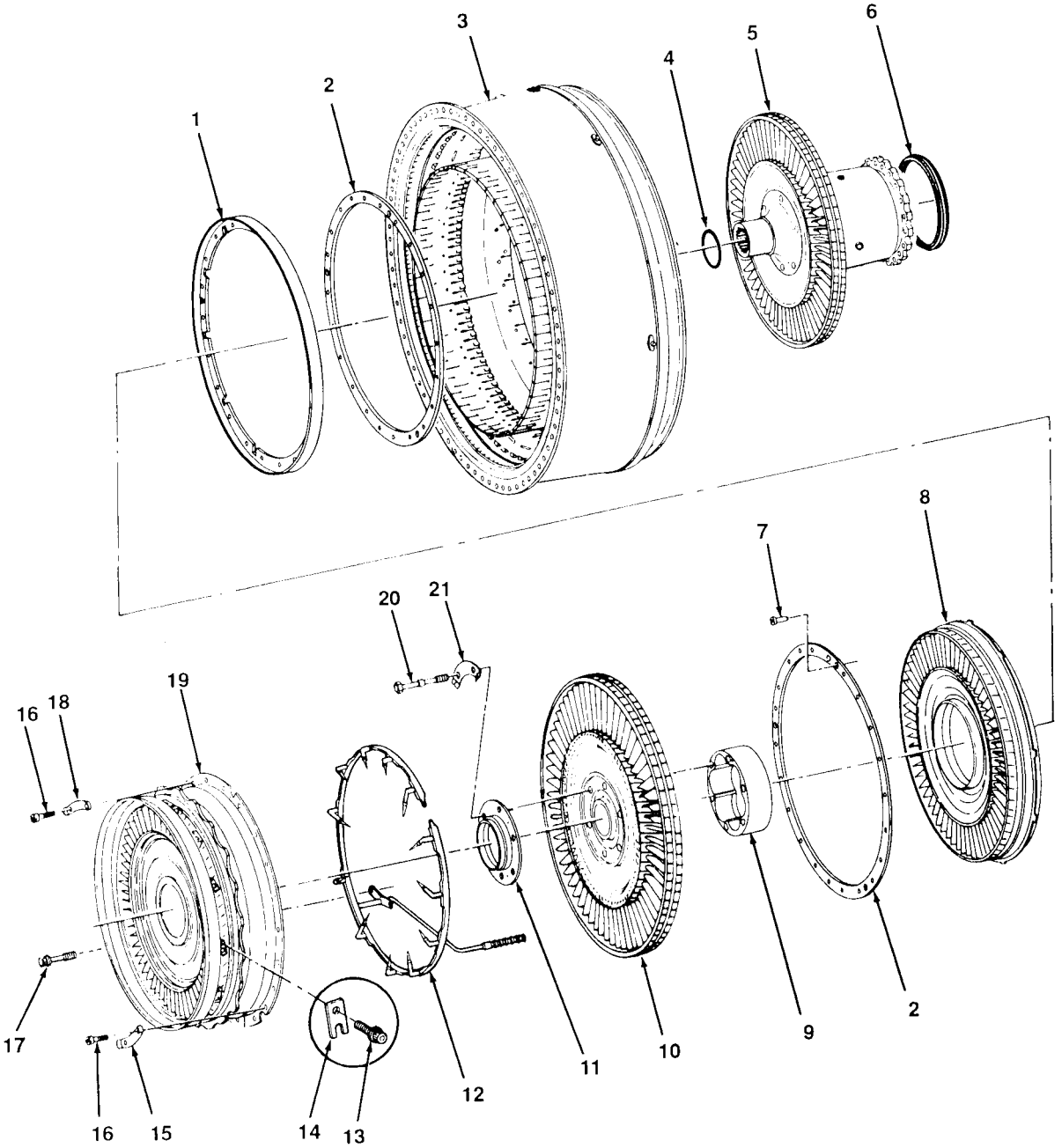

FIGURE 22. FIRST POWER TURBINE NOZZLE, TURBINE ROTOR, SECOND POWER TURBINE NOZZLE, COMBUSTION CHAMBER ASSEMBLY, POWER TURBINE ROTOR AND BEARING HOUSING ASSEMBLY, AND RELATED PARTS

(1) ITEM NO	(2) SMR CODE	(3) NSN	(4) CAGEC	(5) PART NUMBER	(6) DESCRIPTION AND USABLE ON CODE (UOC)	(7) QTY
					GROUP 0403 COMBUSTOR TRUBINE SECTION	
					FIG. 22 FIRST POWER TURBINE NOZZLE, TURBINE ROTOR,SECOND POWER TURBINE NOZZLE, COMBUSTION CHAMBER ASSEMBLY,POWER TURBINE ROTOR AND BEARING HOUSING ASSEMBLY,AND RELATED PARTS	
1	PAOZZ	2840-01-008-7877	91547	1-140-275-06	RING,TURBINE NOZZLE	1
2	PAOZZ	5365-01-010-1513	91547	1-140-303-01	SPACER,PLATE (T53-L-13B AND T53-L-703) PART OF P/N 1-130-630-08 AND 1-130-630-19,0.022 - 0.028 IN. THK	V
2	PAOZZ	5365-01-016-6747	91547	1-140-303-02	SPACER,PLATE (T53-L-13B AND T53-L-703) PART OF P/N 1-130-630-08 AND 1-130-630-19,0.029 - 0.035 IN. THK	V
2	PAOZZ	5365-01-013-3516	91547	1-140-303-03	SPACER,PLATE (T53-L-13B AND T53-L-703) PART OF P/N 1-130-630-08 AND 1-130-630-19,0.036 - 0.044 IN. THK	V
2	XBOZZ		91547	1-140-276-01	SPACER,PLATE (T53-L-13B) PART OF P/N1-130-630-22,0.022 - 0.028 IN. THK UOC:EZL	V
2	PAOZZ	5365-00-947-3185	91547	1-140-276-02	SPACER,PLATE (T53-L-13B) PART OF P/N 1-130-630-22,0.029 - 0.035 IN. THK	V
2	XBOZZ		91547	1-140-276-03	SPACER,PLATE (T53-L-13B) PART OF P/N 1-130-630-22,0.036 - 0.044 IN. THK UOC:EZL	V
3	ADODD		91547	1-130-620-05	CHAMBER ASSEMBLY,CO (T53-L-13B) PART OF P/N 1-130-630-08 AND 1-130-630-22,SEE FIG. 25 FOR BREAKDOWN UOC:EZL	1
3	AFFFD		91547	1-130-620-16	COMB CHAMBER (T53-L-703) PART OF P/N 1-130-630-19,SEE FIG. 25 FOR BREAKDOWN UOC:EZP	1
4	PAOZZ	5330-00-832-8448	96906	MS9205-013	GASKET	1
5	ADODD		91547	1-140-530-14	COMPRESSOR,AXIAL,TU (HSG ASSY,POW TUR ROT & BRG) SEE FIG. 26 FOR BREAKDOWN	1
6	PAOZZ	5330-00-253-1722	91547	1-300-462-01	SEAL,RETAINER	1
7	PAOZZ	5315-00-944-1097	91547	1-190-021-01	PIN,STRAIGHT,HEA	3
7	PAOZZ	5315-00-894-2549	91547	1-190-021-02	PIN,STRAIGHT,HEADED ALTERNATE TO P/N 1-190-021-01	3
7	PAOZZ	5315-00-894-2550	91547	1-190-021-03	PIN,STRAIGHT,HEA ALTERNATE TO P/N 1-190-021-01	3
7	PAOZZ	5315-00-894-2548	91547	1-190-021-04	PIN,STRAIGHT,HEA ALTERNATE TO P/N 1-190-021-01	3
8	PAODD	2840-00-943-2382	91547	1-140-470-05	NOZZLE,TURBINE,TURB ,SECOND POWER,ASSY,SEE FIG. 27 FOR BREAKDOWN	1
9	PAFZZ	5365-01-008-5947	91547	1-140-169-04	SPACER,SLEEVE	1

(1) ITEM NO	(2) SMR CODE	(3) NSN	(4) CAGEC	(5) PART NUMBER	(6) DESCRIPTION AND USABLE ON CODE (UOC)	(7) QTY
10	PAODD	2840-01-010-5949	91547	1-190-010-03	TURBINE ROTOR,TURBI ,FIRST POWER,ASSY,SEE FIG.28 FOR BREAKDOWN	1
11	PAOZZ	2840-00-942-7093	91547	1-190-016-01	SEALING FLANGE,FIRS	1
12	PAOZZ	6685-01-011-8036	81996	1-300-563-AV	HARNESS ASSEMBLY,TH (53-L-703) PART PF P/N 1-130-630-19 UOC:EZP	1
13	PAOZZ	5306-00-775-6235	96906	MS9565-05	BOLT,MACHINE (T53-L-703) PART OF P/N 1-130-630-19 UOC:EZP	12
14	PAOZZ	2840-01-010-5941	91547	1-190-036-02	PLATE,MOUNTING (T53-L-703) PART OF 1-130-630-19 UOC:EZP	12
15	PAOZZ	2840-00-944-0520	91547	1-190-019-03	LOCKING PLATE,NUT A (T53-L-13B) PART OF P/N 1-130-630-08 AND 1-130-630-22 UOC:EZL	10
15	PAOZZ	2840-00-944-0520	91547	1-190-019-03	LOCKING PLATE,NUT A (T53-L-703) PART OF P/N 1-130-630-19 UOC:EZP	9
16	PAOZZ	5305-00-944-4272	91547	1-130-245-01	SCREW,CAP,SOCKET HE (T53-L-13B) PART OF P/N 1-130-630-08 AND 1-130-630-22 UOC:EZL	22
16	PAOZZ	5305-00-944-4272	91547	1-130-245-01	SCREW,CAP,SOCKET HE (T53-L-703) PART OF P/N 1-130-630-19 UOC:EZP	20
17	PAFZZ	5306-01-013-3974	91547	STD3061-12	BOLT,MACHINE (T53-L-703) PART OF P/N 1-130-630-19 UOC:EZP	2
18	PAOZZ	2840-00-945-5619	91547	1-190-019-02	PLATE,LOCKING	1
19	PAFDD	2840-01-089-4291	91547	1-190-050-07	NOZZLE,TURBINE,TURB , FIRST POW,ASSY,(T53-L-13B) PART OF P/N 1-130-630-08 AND 1-130-630-22,SEE FIG. 29 FOR BREAKDOWN UOC:EZL	1
19	PAFDD	2840-01-009-3722	91547	1-190-050-06	NOZZLE,TURBINE,TURB ,FIRST POW TUR,(T53-L-703) PART OF P/N 1-130-630-19,SEE FIG. 30 FOR BREAKDOWN UOC:EZP	1
20	PAOZZ	5306-00-948-3240	91547	1-140-168-02	BOLT,EXTERNALLY REL (T53-L-13B) PART OF P/N 1-130-630-08 UOC:EZL	6
20	PAOZZ	5306-01-010-1053	91547	1-140-168-03	BOLT,EXTERNALLY REL (T53-L-13B AND T53-L-703) PART OF P/N 1-130-630-19 AND 1-130-630-22 UOC:EZL	6
21	PAOZZ	2840-00-943-9876	91547	1-140-142-02	PLATE,LOCKING,POWER	3

END OF FIGURE

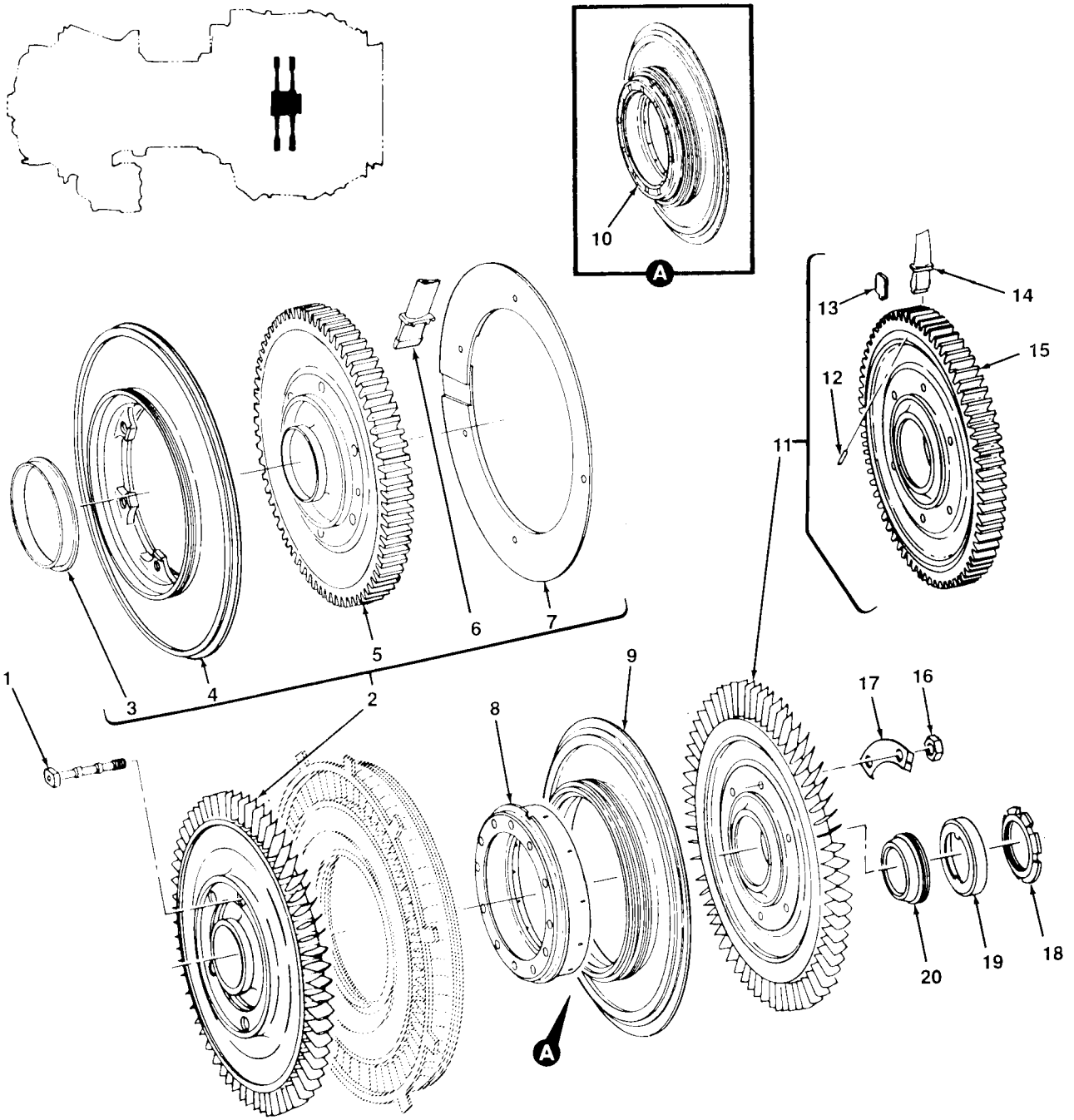

FIGURE 23. FIRST AND SECOND STAGE GAS PRODUCER TURBINE ROTOR ASSEMBLIES AND RELATED PARTS (T53-L-703)

(1) ITEM NO	(2) SMR CODE	(3) NSN	(4) CAGEC	(5) PART NUMBER	(6) DESCRIPTION AND USABLE ON CODE (UOC)	(7) QTY
					GROUP 0403 COMBUSTOR TURBING SECTION	
					FIG.23 FIRST AND SECOND STAGE GAS PRODUCER TURBINE ROTOR ASSEMBLIES AND RELATED PARTS (T53-L-703)	
1	PAFZZ	5306-00-948-3236	91547	1-100-292-02	BOLT,EXTERNALLY REL UOC:EZP	6
2	PAODD	2840-01-010-1450	91547	1-101-100-08	TURBINE ROTOR,TURBI UOC:EZP	1
3	PADZZ	5365-01-010-0958	91547	1-100-559-01	.SPACER,ROTOR UOC:EZP	1
4	PADZZ	2840-01-009-3689	91547	1-100-545-03	.DISK,TURBINE ROTOR UOC:EZP	1
5	PADZZ	2840-00-924-7933	91547	1-100-133-01	.DISCK,TURBINE,TURBIN UOC:EZP	1
6	PADZZ	2840-01-009-3717	91547	1-100-362-06	.BLADE,TURBINE ROTOR UOC:EZP	66
7	PADZZ	5365-01-329-7824	91547	1-100-890-07	.RING,RETAINING UOC:EZP	1
8	PAOZZ	5365-01-008-5952	91547	1-100-546-02	SPACER,SLEEVE FOR FIELD REPLACEMENT USE P/N 1-101-550-01 UOC:EZP	1
9	PADZZ	2840-01-008-7874	91547	1-100-544-03	DISK,TURBING ROTOR FOR FIELD REPLACEMENT USE P/N 1-101-550-01 UOC:EZP	1
10	AFFZZ		91547	1-101-550-01	DISC AND SPACER ASS FIELD REPLACEMENT UOC:EZP	1
11	PAODD	2840-01-008-5983	91547	1-101-360-04	TURBING ROTOR,TURBI UOC:EZP	1
12	PADZZ	5315-00-150-3635	91547	1-140-285-01	.PIN,STRAIGHT,HEADLE UOC:EZP	66
13	PADZZ	2840-00-924-8551	91547	1-100-144-01	.PLATE,SEALING,SECON UOC:EZP	66
14	PADZZ	2840-01-009-3719	91547	1-100-118-07	.BLADE,TURBINE ROTOR UOC:EZP	66
15	PADZZ	2840-00-924-8521	91547	1-100-063-05	.DISCK,TURBINE,TURBIN UOC:EZP	1
16	PAFZZ	5310-00-949-5488	91547	1-100-293-01	NUT,PLAIN,HEXAGON UOC:EZP	6
17	PAOZZ	2840-00-945-5613	91547	1-100-131-01	TABWASHER,GAS PRODU UOC:EZP	3
18	PAOZZ	5310-00-790-8116	91547	1-100-034-01	NUT,PLAIN,ROUND UOC:EZP	1
19	PAOZZ	2840-00-766-8645	91547	1-100-423-01	LOCKRING,COMPRESSOR UOC:EZP	1
20	PAOZZ	5365-00-943-2362	91547	1-110-141-01	RING,EXTERNALLY THR UOC:EZP	1
					END OF FIGURE	

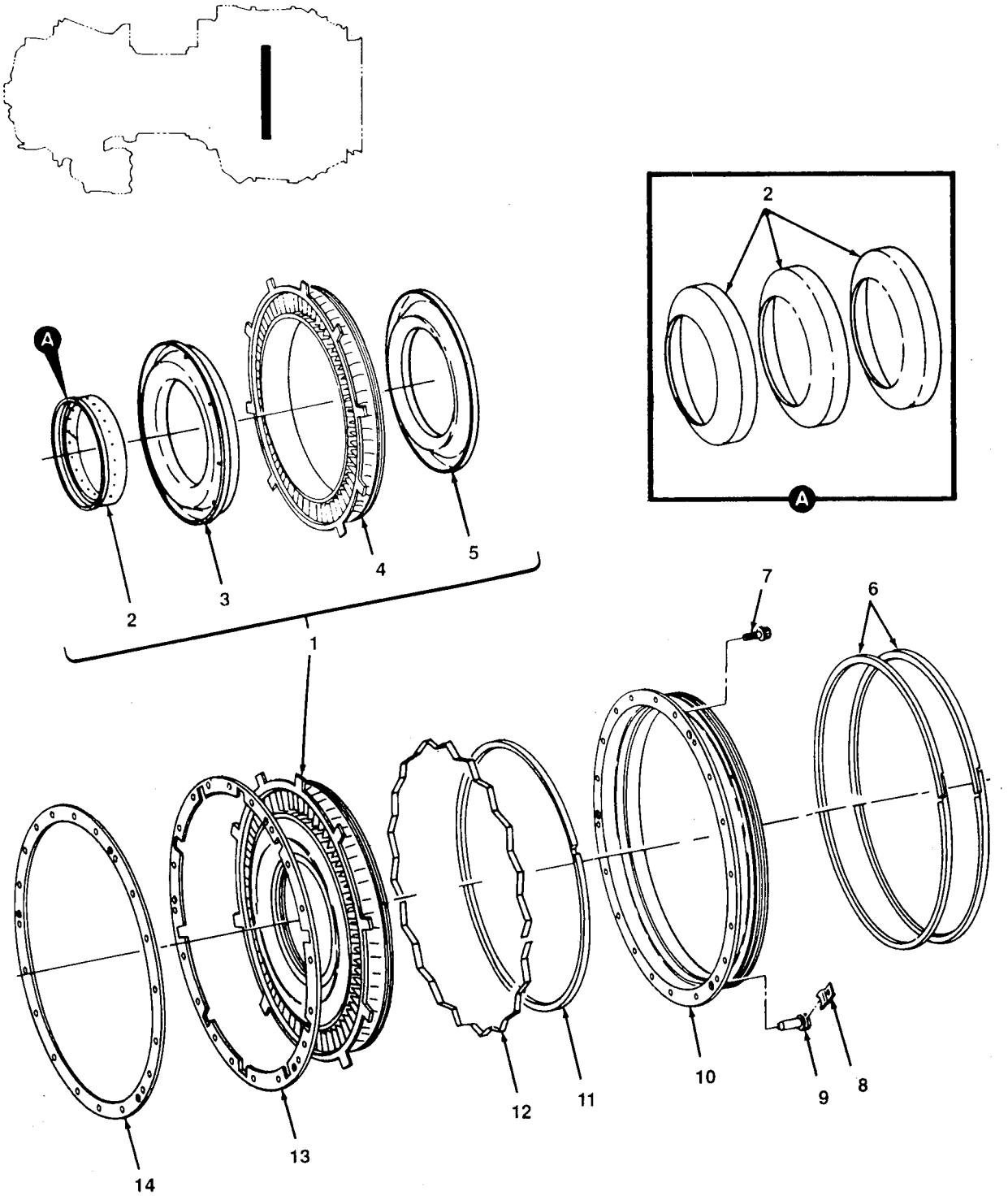

FIGURE 24. SECOND STAGE TURBINE NOZZLE ASSEMBLY, CYLINDER ASSEMBLY, AND RELATED PARTS

(1) ITEM NO	(2) SMR CODE	(3) NSN	(4) CAGEC	(5) PART NUMBER	(6) DESCRIPTION AND USABLE ON CODE (UOC)	(7) QTY
					GROUP 0403 COMBUSTOR TURBINE SECTION	
					FIG. 24 SECOND STAGE TURBING NOZZLE ASSEMBLY,CYLINDER ASSEMBLY, AND RELATED PARTS	
1	PAFDD	2840-00-176-3579	91547	1-120-000-14	NOZZLE,TURBING,TURB (T53-L-13B) PART OF P/N 1-000-060-22 UOC:EZL	1
1	PAODD	2840-01-010-1453	91547	1-120-050-03	NOZZLE,TURBINE,TURB (T53-L-703) PART OF P/N 1-000-060-23 UOC:EZP	1
2	XAOZZ		91547	1-120-028-01	.SEAL,TURBINE,NOZZLE PART OF P/N 1-120-000-14 UOC:EZL	3
2	XADZZ		91547	1-120-040-03	.SEAL,TURBINE NOZZLE PART OF P/N 1-120-050-03 UOC:EZP	1
3	PAOZZ	2840-00-176-3580	91547	1-120-026-03	.SUPPORT,SECOND TURB PART OF P/N 1-120-000-14 UOC:EZL	1
3	PADZZ	2840-01-008-7873	91547	1-120-026-05	.SUPPORT,TURBINE NOZ PART OF P/N 1-120-050-03 UOC:EZP	1
4	XAFZZ		91547	1-120-039-09	.NOZZLE,TURBINE	1
5	XAOZZ		91547	1-120-027-02	.SUPPORT,SECOND TURB PART OF P/N 1-120-000-14 UOC:EZL	1
5	PADZZ	2840-01-009-3688	91547	1-120-027-03	.SUPPORT,TURBINE NOZ PART OF P/N 1-120-050-03 UOC:EZP	1
6	PAOZZ	5330-00-134-7672	91547	1-300-487-01	SEAL RING,METAL	2
7	PAOZZ	5306-01-081-4451	91547	1-110-262-01	BOLT,MACHINE (T53-L-13B) PART OF P/N 1-000-060-22 UOC:EZL	20
7	PAOZZ	5306-01-151-2234	96906	MS9705-11	BOLT,MACHINE (T53-L-703) PART OF P/N 1-000-060-23 UOC:EZP	20
8	PAOZZ	3040-00-924-8571	91547	1-120-034-01	PLATE,RETAINING,SHA	3
9	PAOZZ	5315-00-955-9667	91547	1-120-033-01	PIN,STRAIGHT,HEADED	3
10	PAOZZ	2840-00-944-2547	91547	1-120-032-01	CYLINDER,SECOND STA	1
11	PAOZZ	5330-00-143-8769	91547	1-120-035-02	RETAINER,PACKING	1
12	PAOZZ	5360-00-176-0860	91547	1-120-038-02	SPRING,FLAT (T53-L-13B) PART OF P/N 1-000-060-22 UOC:EZL	1
12	PAOZZ	5360-00-176-0860	91547	1-120-038-02	SPRING,FLAT (T53-L-703) PART OF P/N 1-000-060-23 UOC:EZP	2
13	PAOZZ	2840-00-944-7597	91547	1-120-031-01	RING,SECOND STAGE N	1
14	PAOZZ	5365-00-948-0616	91547	1-120-029-01	SPACER,PLATE 0.022 - 0.028 IN. THK	V
14	PAOZZ	5365-00-178-1455	91547	1-120-029-02	SPACER,PLATE 0.010 - 0.016 IN. THK	V
14	PAOZZ	5365-00-350-6224	91547	1-120-029-03	SHIM 0.078 - 0.084 IN. THK.	V
					END OF FIGURE	

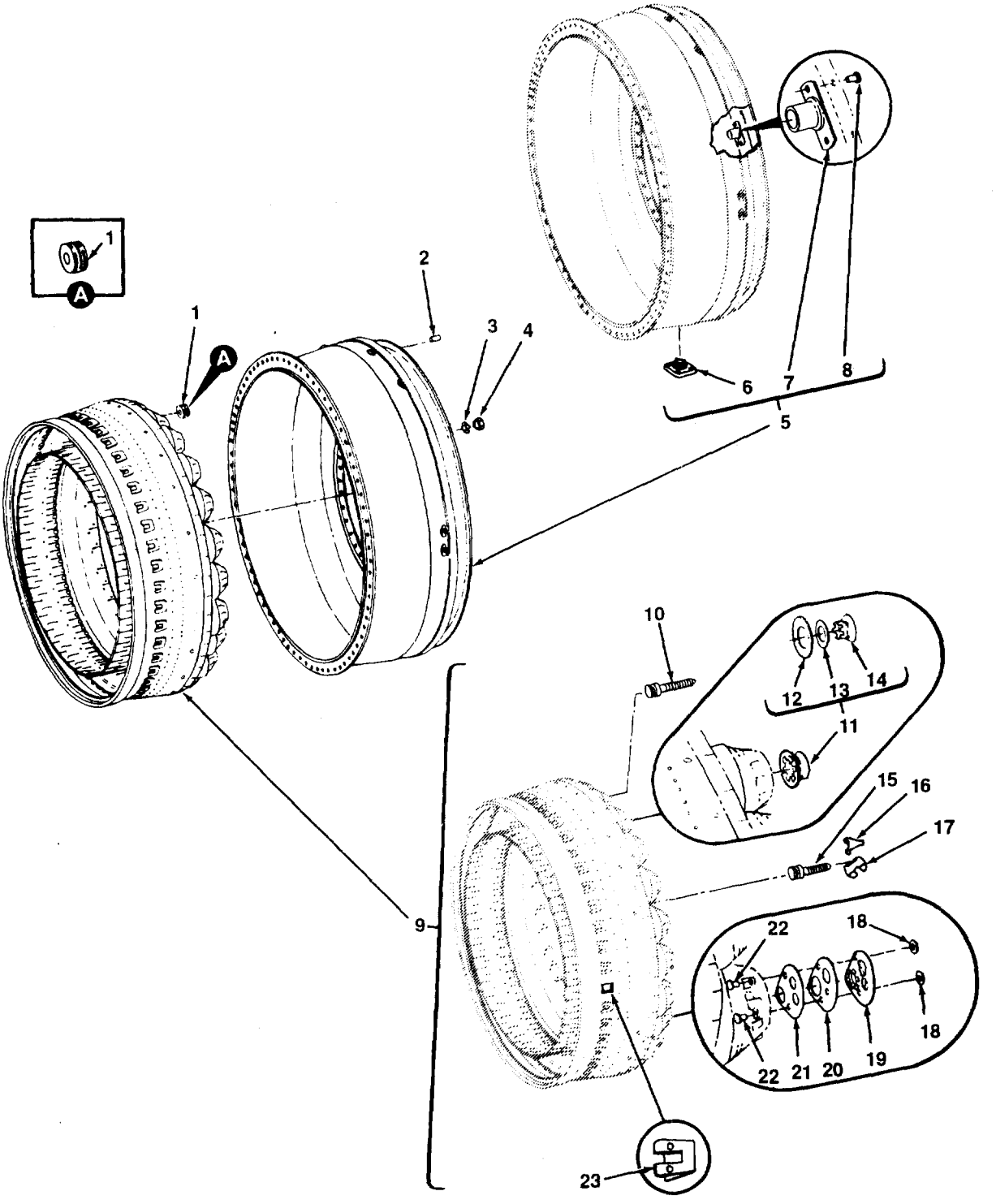

FIGURE 25. COMBUSTION CHAMBER ASSEMBLY

(1)	(2)	(3)	(4)	(5)	(6)	(7)
ITEM NO	SMR CODE	NSN	CAGEC	PART NUMBER	DESCRIPTION AND USABLE ON CODE (UOC)	QTY
					GROUP 0403 COMBUSTOR TURBING SECTION	
				FIG. 25 COMBUSTION CHAMBER ASSEMBLY		
1	PAOZZ	5365-00-915-0046	91547	1-130-218-03	SPACER,SLEEVE (T53-L-13B PART OF P/N 1-130-620-05 UOC:EZL	3
1	PADZZZ	5360-01-008-5944	91547	1-130-278-01	SPRING,FLATE (T53-L-703) PART OF P/N 1-130-620-16 UOC:EZP	6
2	PAFZZ	5315-00-543-3033	96906	MS171522	PIN,SPRING	1
3	PAOZZ	5310-00-945-5750	91547	1-130-235-01	WASHER,KEY	6
4	PAOZZ	5310-00-234-7821	96906	MS9356-11	NUT,PLAIN,HEXAGON	6
5	PAODD	2840-01-008-5731	91547	1-130-610-12	CASE,COMBUSTION CHA	1
6	PBFZZ	2840-00-494-5492	91547	1-130-018-02	.PAD,DRAIN VALVE	1
7	PAFZZ	2840-00-012-3284	91547	1-130-710-01	.SUPPORT, LINER, COM	6
8	PAFZZ	5320-00-995-1876	96906	MS20613-4C4	.RIVIT,SOLID	12
9	PAODD	2840-00-943-2375	91547	1-130-780-01	CHAMBER,COMBUSTION, (T53-L-13B) PART OF P/N 1-130-620-05 UOC:EZL	1
9	PAODD	2840-01-010-5841	91547	1-130-780-03	CHAMBER,COMBUSTION, (T53-L-703) PART OF P/N 1-130-620-16 UOC:EZP	1
10	PAOZZ	5315-00-947-3250	91547	1-130-256-01	.PIN,SHOULDER,HEADLE PART OF P/N 1-130-780-01 UOC:EZL	3
11	PAFZZ	2840-00-855-6102	91547	1-130-790-01	.SEAL AND GUIDE ASSY	18
12	PAFZZ	2840-00-954-4477	91547	1-130-266-01	..RETAINER,SEAL GUIDE	1
13	PAFZZ	5310-00-931-4785	91547	1-130-259-02	..WASHER,FLAT	1
14	XADZZ		91547	1-130-258-02	..GUIDE	1
15	PAOZZ	5340-00-950-2664	91547	1-130-256-02	.POST,ELECTRICAL-MEC PART OF P/N 1-130-780-01 UOC:EZL	3
15	PAOZZ	5340-00-950-2664	91547	1-130-256-02	.POST,ELECTRICAL-MEC PART OF P/N 1-130-780-03 UOC:EZP	6
16	PAOZZ	2840-00-944-7808	91547	1-130-257-01	.PLATE,STUD RETAINER	6
17	PADZZ	5340-00-954-4700	91547	1-130-255-01	.BRACKET,ENGINE ACCE	6
18	PADZZ	5310-00-903-4633	91547	1-130-265-01	.WASHER,FLAT	8
19	PADZZ	2840-00-954-4480	91547	1-130-800-01	.SEAL GUIDE,ATOMIZER	4
20	PADZZ	5330-00-954-4472	91547	1-130-262-02	.GASKET	4
21	PADZZ	5330-00-950-6824	91547	1-130-261-01	.GASKET,IGNITER PLU	4
22	PADZZ	5320-00-955-9397	91547	1-130-264-01	.RIVET,TUBULAR	8
23	PAOZZ	2840-00-474-9712	91547	1-130-248-02	.DEFLECTOR,COMBUSTIO	44
					END OF FIGURE	

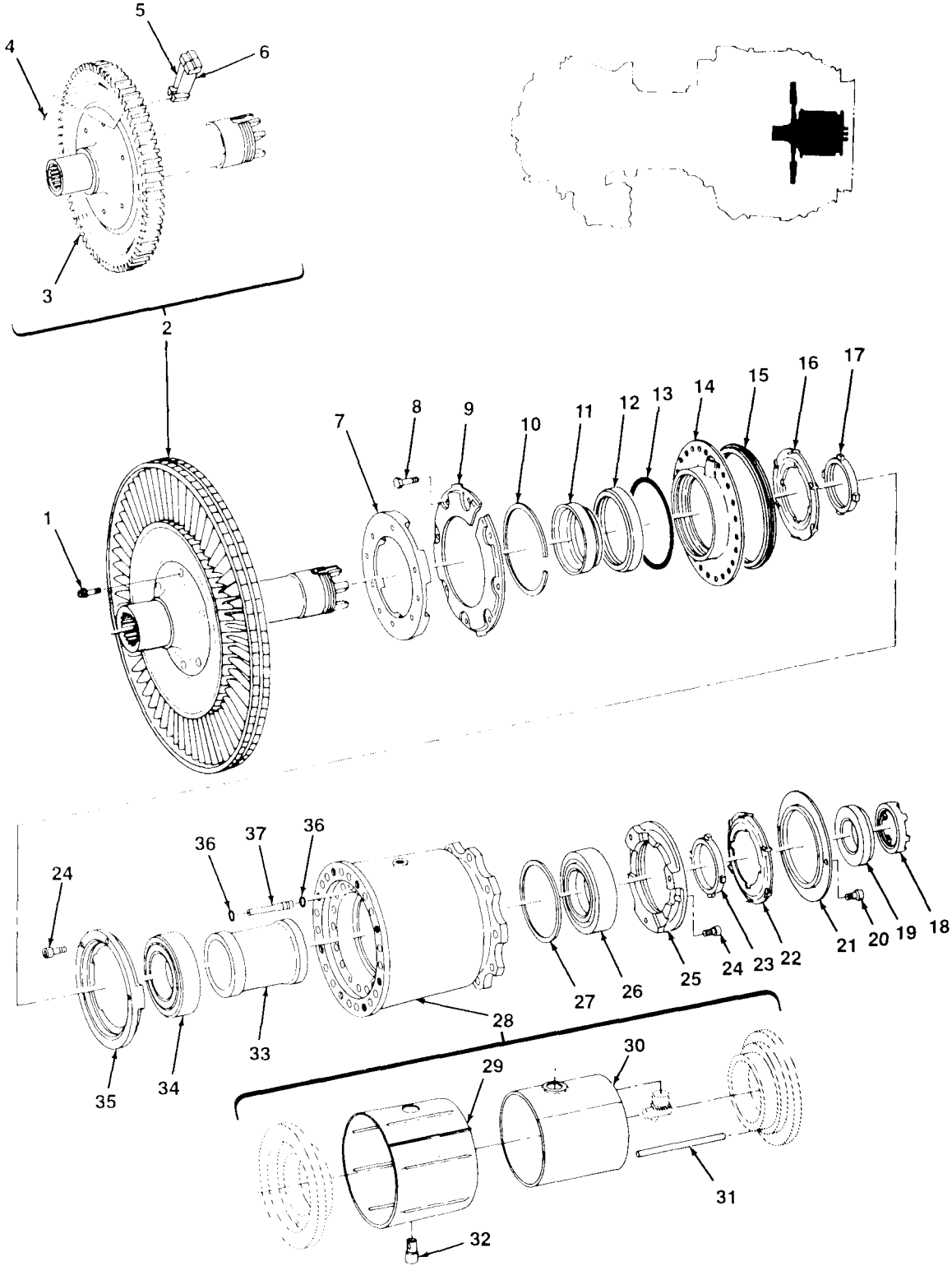

FIGURE 26. POWER TURBINE ROTOR AND BEARING HOUSING ASSEMBLY

(1)	(2)	(3)	(4)	(5)	(6)	(7)
ITEM NO	SMR CODE	NSN	CAGEC	PART NUMBER	DESCRIPTION AND USABLE ON CODE (UOC)	QTY
					GROUP 0404 POWER TURBINE SECTION	
					FIG.26 POWER TURBING ROTOR AND BEARING HOUSING ASSEMBLY	
1	PAOZZ	5306-00-948-3243	91547	1-140-157-02	BOLT,MACHINE	3
2	PAODD	2840-01-008-5982	91547	1-140-550-07	TURBINE ROTOR,TURBI	1
3	PADZZ	2840-01-008-5986	91547	1-140-272-04	.DISK AND HUB,TURBIN	1
4	PADZZ	5315-00-150-3635	91547	1-140-285-01	.PIN,STRAIGHT,HEADLE	62
5	PADZZ	2840-00-925-4151	91547	1-140-273-03	.BLADE,TURBINE ROTOR	31
6	PADZZ	2840-00-943-2216	91547	1-140-274-02	.BLADE,TURBINE ROTOR	31
7	PAOZZ	5340-00-925-4146	91547	1-140-144-02	CLAMP,RIM CLENCHING	1
8	PAOZZ	5306-00-281-9541	88044	AN106506	BOLT,MACHINE	8
9	PAOZZ	2840-00-925-4148	91547	1-140-025-05	DEFLECTOR SUPPORT,P	1
10	PAOZZ	5365-00-947-9880	91547	1-300-316-01	RING,RETAINING	1
11	PAOZZ	5330-00-947-6221	91547	1-140-268-01	RETAINER,PACKING	1
12	PAOZZ	5330-00-946-7073	91547	1-300-336-01	SEAL,PLAIN ENCASED	1
13	PAOZZ	5330-00-045-9714	91547	STD3019E58	PACKING,PREFORMED	1
14	PAOZZ	2840-01-128-6309	91547	1-140-190-05	HOUSING,REDUCTION G	1
15	PAOZZ	5330-00-253-1722	91547	1-300-462-01	SEAL,RETAINER	1
16	PAOZZ	4140-00-925-4149	91547	1-140-189-02	IMPELLER,FAN,CENTRI	1
17	PAOZZ	5365-00-925-7307	91547	1-140-162-02	RING,RETAINING	1
18	PAOZZ	5310-00-658-5308	91547	1-140-061-01	NUT,PLAIN,ROUND	1
19	PAOZZ	2840-00-925-9747	91547	1-140-062-03	CUP,LOCK,BEARING RE	1
20	PAOZZ	5305-00-412-4448	88044	AN510C5R4	SCREW,MACHINE	2
21	PAOZZ	1560-00-925-4150	91547	1-140-192-02	COVER,ACCESS	1
22	PAOZZ	1660-00-925-4152	91547	1-140-191-02	IMPELLER WHEEL,AIRC	1
23	PAFZZ	5310-00-933-1370	91547	1-140-161-01	WASHER,KEY	1
24	PAOZZ	5305-00-068-5414	96906	MS16995-11	SCREW,CAP,SOCKET HE	4
25	PAOZZ	2840-00-942-9548	91547	1-140-670-02	RING ASSEMBLY,BEARI	1
26	PAODD	3110-00-727-3032	91547	1-300-015-04	BEARING,BALL,ANNULA	1
27	PAOZZ	5365-00-655-7768	91547	1-100-227-01	SPACER,RING 0.020 - 0.022 IN. THK	V
27	PAOZZ	5365-00-655-7782	91547	1-100-227-02	SPACER,RING 0.023 - 0.025 IN. THK	V
27	PAOZZ	5365-00-655-7781	91547	1-100-227-03	SPACER,RING 0.026 - 0.028 IN. THK	V
27	PAOZZ	5365-00-655-7780	91547	1-100-227-04	SPACER,RING 0.029 - 0.031 IN. THK	V
27	PAOZZ	5365-00-655-7779	91547	1-100-227-05	SPACER,RING 0.032 - 0.034 IN. THK	V
27	PAOZZ	5365-00-655-7778	91547	1-100-227-06	SPACER,RING 0.035 - 0.037 IN. THK	V
27	PAOZZ	5365-00-655-7777	91547	1-100-227-07	SPACER,RING 0.038 - 0.040 IN. THK	V
27	PAOZZ	5365-00-655-7776	91547	1-100-227-08	SPACER,RING 0.041 - 0.043 IN. THK	V
27	PAOZZ	5365-00-655-7791	91547	1-100-227-09	SPACER,RING 0.044 - 0.046 IN. THK	V
27	PAOZZ	5365-00-655-7790	91547	1-100-227-10	SPACER,RING 0.047 - 0.049 IN. THK	V
27	PAOZZ	5365-00-655-7789	91547	1-100-227-11	SPACER,RING 0.050 - 0.052 IN. THK	V
27	PAOZZ	5365-00-655-7788	91547	1-100-227-12	SPACER,RING 0.053 - 0.055 IN. THK	V
27	PAOZZ	5365-00-655-7785	91547	1-100-227-13	SPACER,RING 0.056 - 0.058 IN. THK	V
27	PAOZZ	5365-00-655-7784	91547	1-100-227-14	SPACER,RING 0.059 - 0.061 IN. THK	V
27	PAOZZ	5365-00-655-7767	91547	1-100-227-15	SPACER,RING 0.062 - 0.064 IN. THK	V
27	PAOZZ	5365-00-655-7787	91547	1-100-227-16	SPACER,RING 0.065 - 0.067 IN. THK	V
27	PAOZZ	5365-00-655-7783	91547	1-100-227-17	SPACER,RING 0.068 - 0.070 IN. THK	V
27	PAOZZ	5365-00-655-7769	91547	1-100-227-18	SPACER,RING 0.071 - 0.073 IN. THK	V
27	PAOZZ	5365-00-655-7786	91547	1-100-227-19	SPACER,RING 0.074 - 0.076 IN. THK	V
27	PAOZZ	5365-00-655-7765	91547	1-100-227-20	SPACER,RING 0.077 - 0.079 IN. THK	V
27	PAOZZ	5365-00-655-7766	91547	1-100-227-21	SPACER,RING 0.080 - 0.082 IN. THK	V
27	PAOZZ	5365-00-771-7187	91547	1-100-227-22	SPACER,RING 0.083 - 0.085 IN. THK	V
27	PAOZZ	5365-00-771-7184	91547	1-100-227-23	SPACER,RING 0.086 - 0.088 IN. THK	V
27	PAOZZ	5365-00-771-7185	91547	1-100-227-24	SPACER,RING 0.089 - 0.091 IN. THK	V
27	PAOZZ	5365-00-994-4277	91547	1-100-227-25	SPACER,RING 0.092 - 0.094 IN. THK	V
27	PAOZZ	5365-00-994-4276	91547	1-100-227-26	SPACER,RING 0.095 - 0.097 IN. THK	V
27	PAOZZ	5365-00-994-4275	91547	1-100-227-27	SPACER,RING 0.098 - 0.100 IN. THK	V

(1) ITEM NO	(2) SMR CODE	(3) NSN	(4) CAGEC	(5) PART NUMBER	(6) DESCRIPTION AND USABLE ON CODE (UOC)	(7) QTY
27	PAOZZ	5365-00-994-4274	91547	1-100-227-28	SPACER,RING 0.101 - 0.103 IN. THK	V
27	PAOZZ	5365-00-994-4273	91547	1-100-227-29	SPACER,RING 0.104 - 0.106 IN. THK	V
27	PAOZZ	5365-00-994-4272	91547	1-100-227-30	SPACER,RING 0.107 - 0.109 IN. THK	V
27	PAOZZ	5365-00-987-9533	91547	1-100-227-31	SPACER,RING 0.110 - 0.112 IN. THK	V
27	PAOZZ	5365-00-989-2830	91547	1-100-227-32	SPACER,RING 0.113 - 0.115 IN. THK	V
28	PAFZZ	2840-01-011-5045	91547	1-140-590-09	HOUSING,ANTIFRICTIO MAKE FROM P/N 1-140-590-08	1
29	PAFZZ	2840-01-360-7968	91547	1-140-165-03	.BAFFLE,AIRFLOW,ENGI PART OF P/N 1-140-590-08	1
30	PAFZZ	5365-01-361-6663	91547	1-140-164-03	.SPACER,SLEEVE PART OF P/N 1-140-590-08	1
31	PAFZZ	5365-00-014-5867	91547	STD3024C29	.SPACER,SLEEVE PART OF P/N 1-140-590-08	1
32	PADZZ	2840-00-922-5852	91547	1-140-011-01	.ADAPTER,OIL LINE,BE PART OF P/N 1-140-590-08	1
33	PAOZZ	5365-00-959-5744	91547	1-140-009-02	SPACER,BEARING,TURB	1
34	PAFZZ	3110-01-382-6374	91547	1-300-665-01	BEARING,ROLLER,CYLI	1
35	PAOZZ	2840-00-924-7625	91547	1-140-660-02	RING ASSEMBLY,FORWA	1
36	PAOZZ	5330-00-166-0963	81349	M83248/1-006	PACKING,PREFORMED	2
37	PAOZZ	4710-00-924-7767	91547	1-140-271-01	TUBE,OIL TRANSFER	1

END OF FIGURE

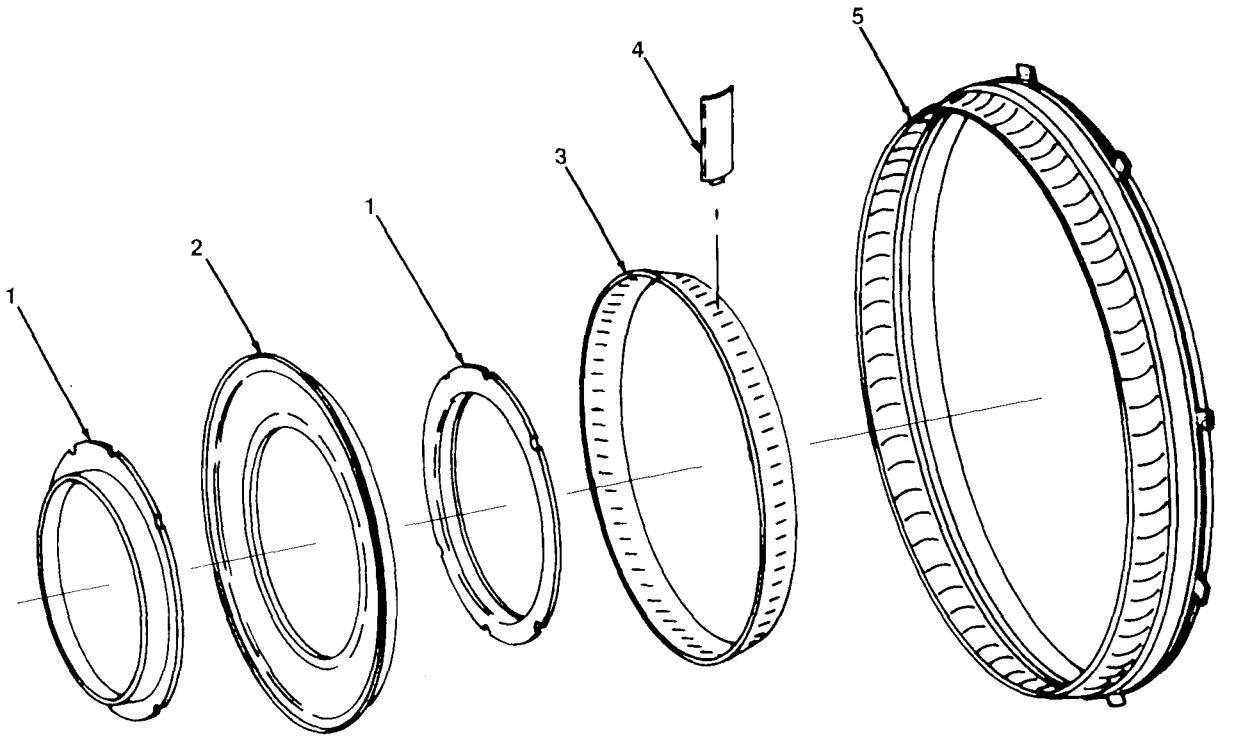

FIGURE 27. SECOND POWER TURBINE NOZZLE ASSEMBLY

(1) ITEM NO	(2) SMR CODE	(3) NSN	(4) CAGEC	(5) PART NUMBER	(6) DESCRIPTION AND USABLE ON CODE (UOC)	(7) QTY
					GROUP 0404 POWER TURBINE SECTION	
					FIG. 27 SECOND POWER TURBINE NOZZLE ASSEMBLY	
1	PADZZ	5330-00-462-8883	91547	1-140-102-02	SEAL,TURBINE NOZZLE	2
2	PADZZ	2840-00-462-8869	91547	1-140-176-02	SUPPORT,TURBINE NOZ	1
3	XADZZ		91547	1-140-113-03	SHROUD,NOZZLE	1
4	PADZZ	2840-00-234-6292	91547	1-140-258-04	VANE,TURBINE NOZZLE	67
5	XADZZ		91547	1-140-261-03	SHROUD	1
					END OF FIGURE	

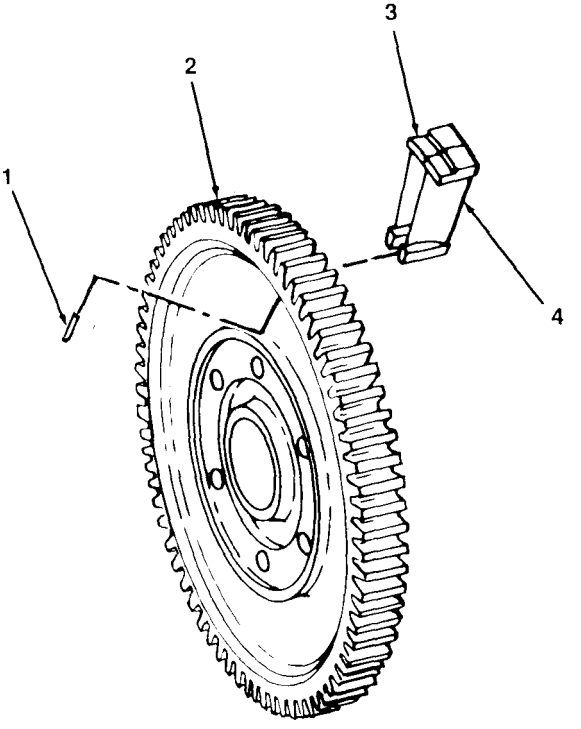

FIGURE 28. FIRST POWER TURBINE ROTOR ASSEMBLY

(1) ITEM NO	(2) SMR CODE	(3) NSN	(4) CAGEC	(5) PART NUMBER	(6) DESCRIPTION AND USABLE ON CODE (UOC)	(7) QTY
					GROUP 0404 POWER TURBINE SECTION	
					FIG. 28 FIRST POWER TURBINE ROTOR ASSEMBLY	
1	PADZZ	5315-00-150-3635	91547	1-140-285-01	PIN,STRAIGHT,HEADLE	66
2	PADZZ	2840-00-925-9560	91547	1-190-009-05	DISK,TURBINE,TURBIN	1
3	PADZZ	2840-01-009-3718	91547	1-190-007-07	BLADE,TURBINE ROTOR	33
4	PADZZ	2840-01-008-7887	91547	1-190-008-04	BLADE,TURBINE ROTOR	33
					END OF FIGURE	

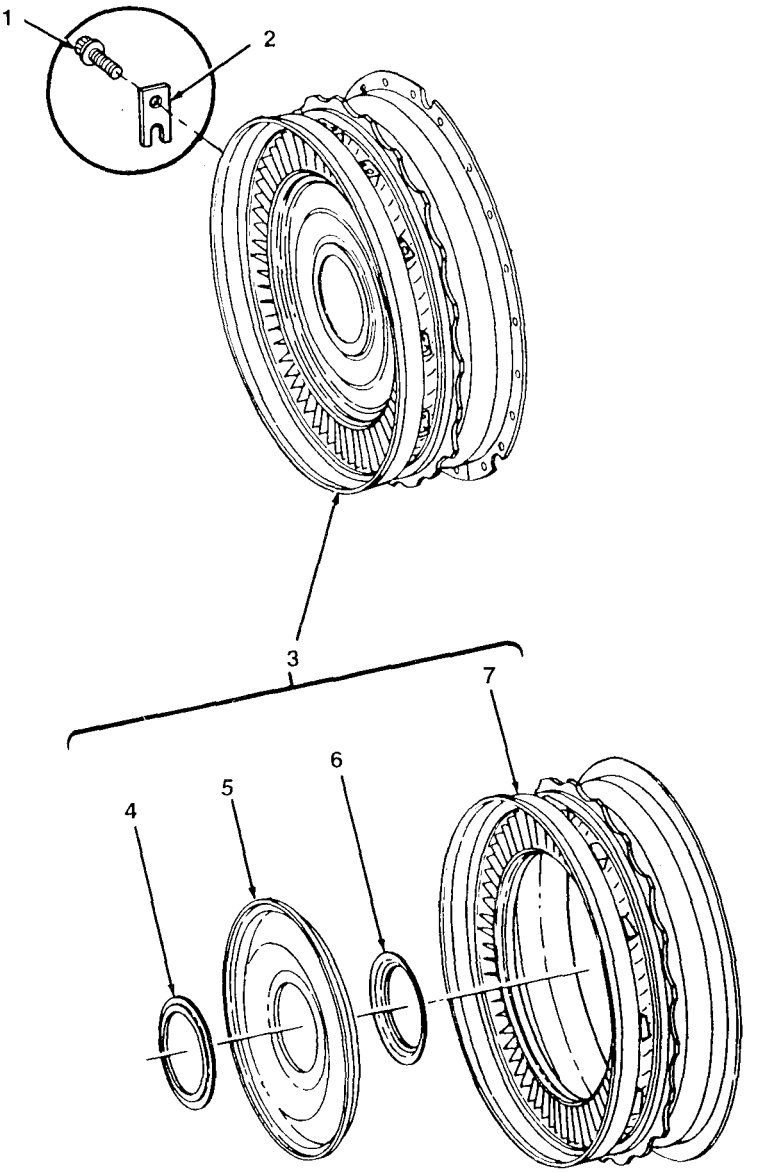

FIGURE 29. FIRST POWER TURBINE NOZZLE ASSEMBLY
(T53-L-13B)

(1)	(2)	(3)	(4)	(5)	(6)	(7)
ITEM NO	SMR CODE	NSN	CAGEC	PART NUMBER	DESCRIPTION AND USABLE ON CODE (UOC)	QTY
					GROUP 0404 POWER TURBINE SECTION	
					FIG. 29 FIRT POWER TURBINE NOZZLE ASSEMBLY (T53-L-13B)	
1	XBFZZ		96906	MS9565-05	BOLT,MACHINE UOC:EZL	12
2	PAFZZ	2840-01-089-4107	91547	1-190-037-01	PLATE,COVER UOC:EZL	12
3	PAFDD	2840-01-009-3722	91547	1-190-050-06	NOZZLE,TURBINE,TURB UOC:EZL	1
4	PADZZ	2840-00-106-0067	91547	1-190-014-02	.FLANGE,NOZZLE SEAL UOC:EZL	1
5	PADZZ	2840-01-009-3686	91547	1-190-033-01	.RING,TURBINE NOZZLE UOC:EZL	1
6	PADZZ	2840-00-106-2360	91547	1-190-015-02	.FLANGE,TURBINE NOZZ UOC:EZL	1
7	XADZZ		91547	1-190-032-03	.NOZZLE UOC:EZL	1
					END OF FIGURE	

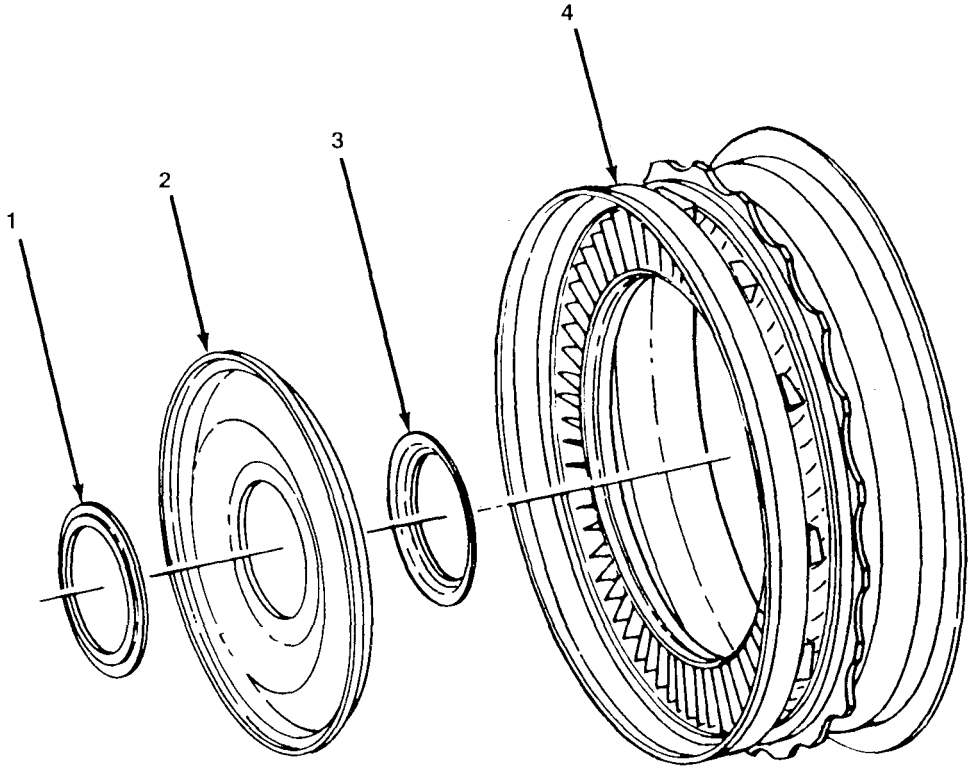

FIGURE 30. FIRST POWER TURBINE NOZZLE ASSEMBLY
(T53-L-703)

(1) ITEM NO	(2) SMR CODE	(3) NSN	(4) CAGEC	(5) PART NUMBER	(6) DESCRIPTION AND USABLE ON CODE (UOC)	(7) QTY
					GROUP 0404 POWER TURBINE SECTION	
					FIG. 30 FIRST POWER TURBINE NOZZLE ASSEMBLY(T53-L-703)	
1	PADZZ	2840-00-106-0067	91547	1-190-014-02	FLANGE,NOZZLE SEAL UOC:EZP	1
2	PADZZ	2840-01-009-3686	91547	1-190-033-01	RING,TURBINE NOZZLE UOC:EZP	1
3	PADZZ	2840-00-106-2360	91547	1-190-015-02	FLANGE,TURBINE NOZZ UOC:EZP	1
4	XADZZ		91547	1-190-032-03	NOZZLE UOC:EZP	1
					END OF FIGURE	

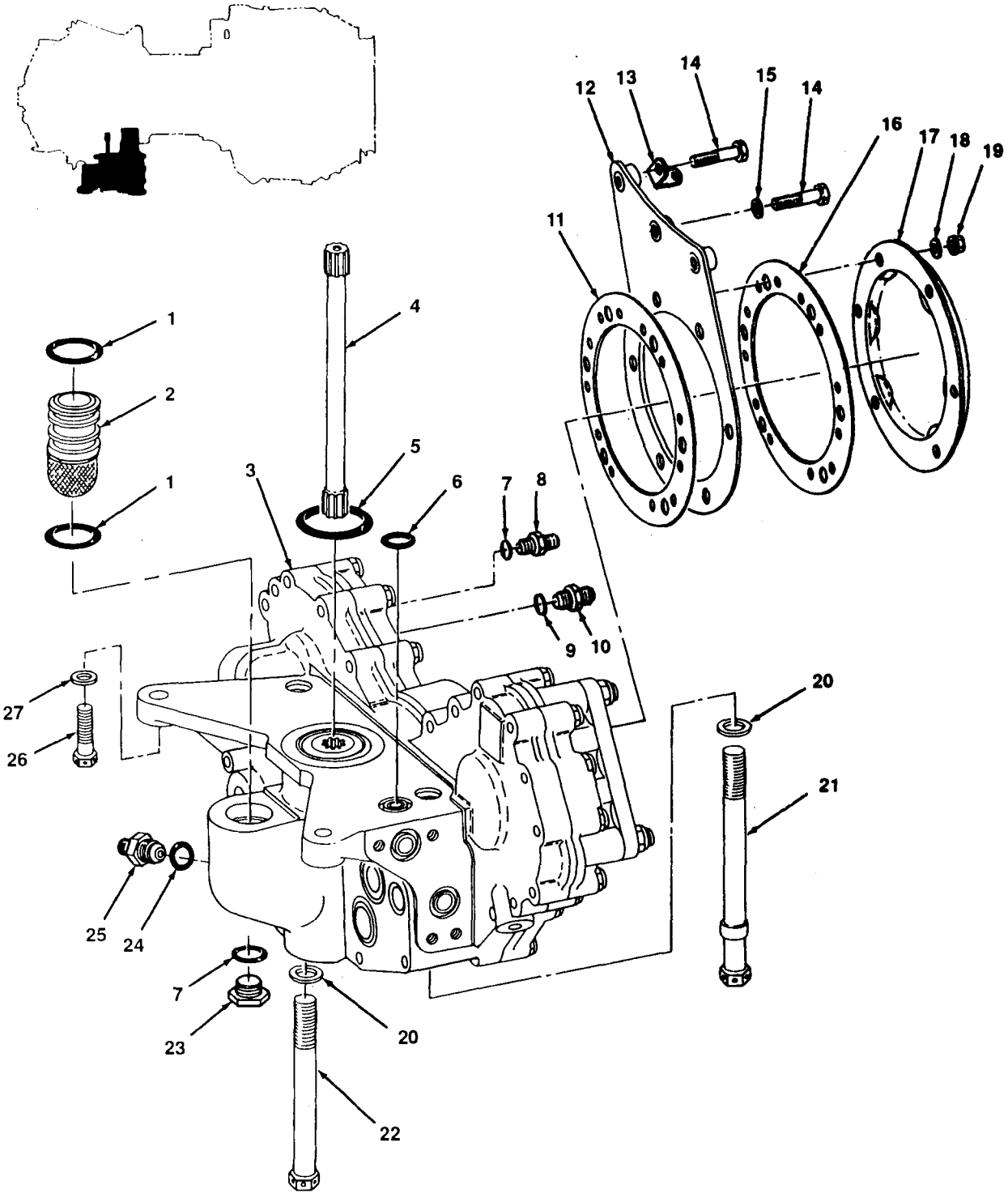

FIGURE 31. ACCESSORY DRIVE GEARBOX ASSEMBLY AND RELATED PARTS

(1) ITEM NO.	(2) SMR CODE	(3) NSN	(4) CAGEC	(5) PART NUMBER	(6) DESCRIPTION AND USABLE ON CODE (UOC)	(7) QTY
					GROUP 0405 ACCESSORY GEAR SECTION	
					FIG. 31 ACCESSORY DRIVE GEARBOX ASSEMBLY AND RELATED PARTS	
1	PAOZZ	5330-00-167-5111	81349	M83248/1-122	PACKING, PREFORMED	2
2	PAOZZ	4730-00-872-6125	91547	1-080-430-01	STRAINER ELEMENT, SE	1
3	PAODD	2840-01-331-3053	91547	1-080-250-25	GEARBOX, ACCESSORY D SEX FIG. 32 AND 33 FOR BREAKDOWN	1
4	PAOZZ	2840-00-784-3989	91547	1-080-282-01	SHAFT, ACCESSORY DRI	1
5	PAOZZ	5330-00-167-5119	81349	M83248/1-131	PACKING, PREFORMED	1
6	PAOZZ	5330-00-166-1063	81349	M83240/1-114	PACKING, PREFORMED	1
7	PAOZZ	5330-00-020-0203	81349	M83248/1-904	PACKING, PREFORMED	2
8	PAOZZ	4730-00-684-6912	96906	MS2439254	NIPPLE, TUBE	1
9	PAOZZ	5330-00-020-0105	81349	M83248/1-908	PACKING, PREFORMED	1
10	PAOZZ	4730-00-804-1589	91547	1-110-217-01	UNION, SCAVENGE	1
11	PAOZZ	5330-00-654-8932	91547	1-080-026-01	GASKET USED WITH P/N 1-080-100-03	1
12	PAOZZ	2840-00-976-9303	91547	1-080-100-03	SUPPORT ASSEMBLY, AC	1
13	PAOZZ	5340-00-775-6514	91547	1-160-468-01	BRACKET, ANGLE	1
14	PAOZZ	5306-00-984-2641	91547	1-080-185-01	BOLT, MACHINE	3
15	PAOZZ	5310-00-995-6919	91547	1-080-186-01	WASHER, FLAT	2
16	PAOZZ	5330-00-654-8932	91547	1-080-026-01	GASKET USED WITH P/N 7727030-03	1
17	PAOZZ	2840-01-145-3859	98748	7727030-03	COVER, ENGINE ACCESS USED FOR SHIPPING ONLY	1
18	PAOZZ	5310-00-167-0837	88044	AN960-616L	WASHER, FLAT USED WITH P/N 7727030-03	6
19	PAOZZ	5310-00-807-1477	96906	MS21042L6	NUT, SELF-LOCKING, EX USED WITH P/N 7727030-03	6
20	PAOZZ	5310-00-064-9437	91547	1-000-051-01	WASHER, FLAT	2
21	PAOZZ	5306-00-660-3271	91547	1-080-081-01	BOLT, SHOULDER	1
22	PAOZZ	5306-00-248-5888	96906	MS9533-42	BOLT, MACHINE	1
23	PAOZZ	5365-00-458-2613	96906	MS9902-04	PLUG, MACHINE THREAD	1
24	PAOZZ	5330-00-020-0186	81349	M83248/1-906	PACKING, PREFORMED	1
25	PAOZZ	4730-00-786-2992	91547	1-300-243-01	CHIP DETECTOR, MAGNE	1
26	PAOZZ	5306-00-211-9185	96906	MS9532-14	BOLT, MACHINE	2
27	PAOZZ	5310-00-064-9438	91547	1-080-051-02	WASHER, FLAT	2

END OF FIGURE

MartinezEd
CONFIDENTIAL

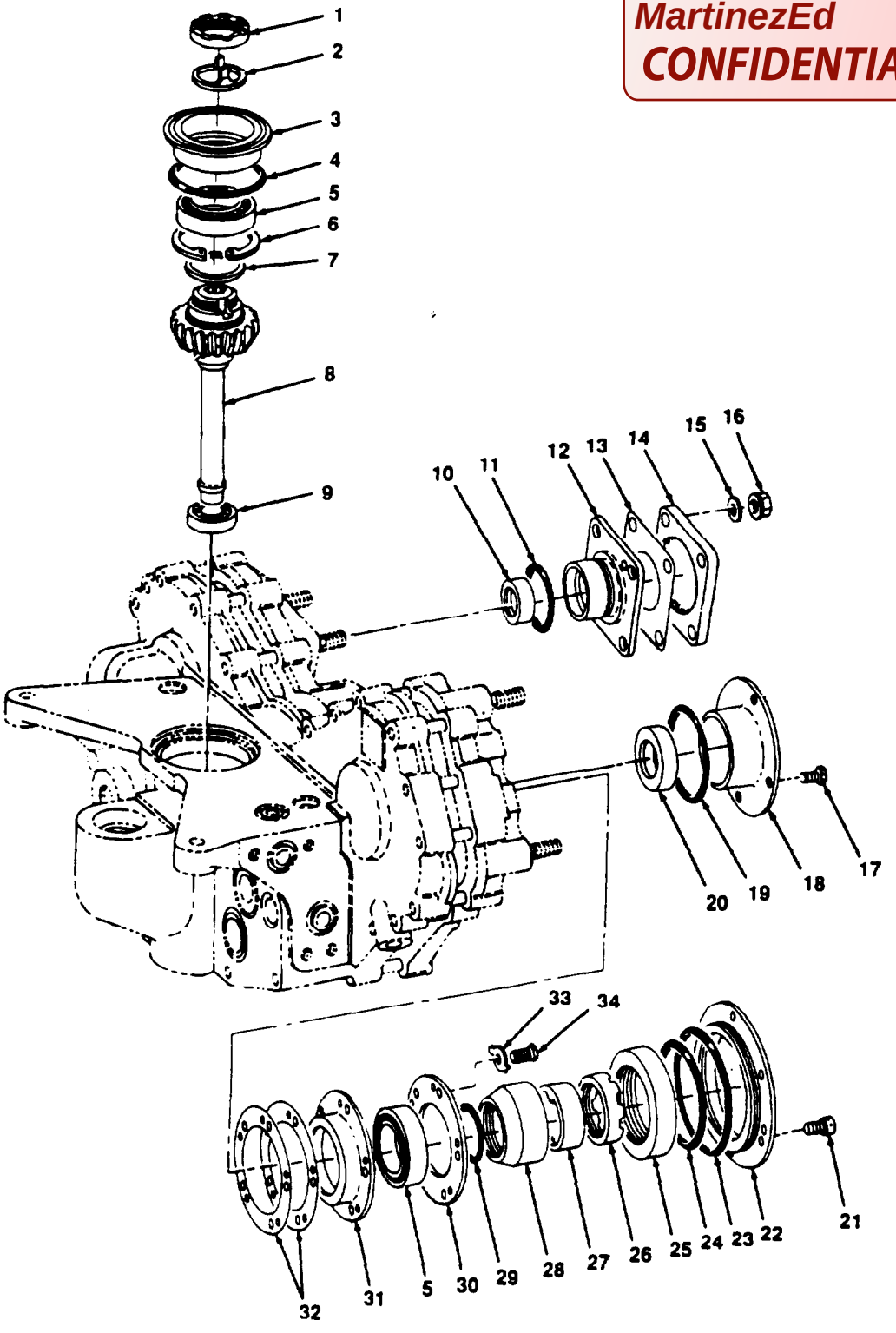

FIGURE 32. ACCESSORY DRIVE GEARBOX SHAFT ASSEMBLY TACHOMETER FLANGE, FUEL CONTROL LINER, STARTER SEAL HOUSING, ACCESSORY PAD COVER, AND RELATED PARTS

GROUP 0405 ACCESSORY GEAR SECTION

FIG. 32 ACCESSORY DRIVE GEARBOX SHAFT ASSEMBLY,TACHOMETER FLANGE,FUEL CONTROL LINER, STARTER SEAL HOUSING, ACCESSORY PAD COVER,AND RELATED PARTS

(1) ITEM NO	(2) SMR CODE	(3) NSN	(4) CAGEC	(5) PART NUMBER	(6) DESCRIPTION AND USABLE ON CODE (UOC)	(7) QTY
1	PADZZ	5310-00-475-5442	91547	1-080-259-01	NUT,PLAIN,ROUND	1
2	PADZZ	5310-00-740-3378	91547	1-080-267-01	WASHER,KEY	1
3	PADZZ	2840-00-736-3979	91547	1-080-261-01	LINER,PINION,OUTER	1
4	PADZZ	5330-00-537-3929	81349	M83248/1-138	PACKING,PREFORMED	1
5	PAFZZ	3110-00-080-7606	91547	1-300-006-01	BEARING,BALL,ANNULA	2
6	PADZZ	5365-00-754-1896	96906	MS16625-1185	RING,RETAINING	1
7	PADZZ	5365-00-825-3767	91547	1-080-014-01	SHIM	1
8	PAFDD	3020-00-739-2589	91547	1-080-320-01	SHAFT GEAR ASSEMBLY	1
9	PADZZ	3110-00-580-3268	91547	1-300-002-02	BEARING,BALL,ANNULA	1
10	PAOZZ	5330-00-143-8648	91547	1-300-234-02	SEAL,PLAIN ENCASED	1
11	PAOZZ	5330-00-166-1020	81349	M83248/1-024	PACKING,PREFORMED	1
12	PAOZZ	2840-00-784-3993	91547	1-080-256-01	FLANGE,TACHOMETER D	1
13	PAOZZ	5330-00-023-7623	96906	MS9134-01	GASKET	1
14	PAOZZ	5340-00-145-7961	88044	AN100043	COVER,ACCESS	1
15	PAOZZ	5310-00-167-0835	88044	AN960-416L	WASHER,FLAT	4
16	PAOZZ	5310-00-807-1468	96906	MS21042-4	NUT,SELF-LOCKING,EX	4
17	PAOZZ	5306-00-082-0857	96906	MS9529-04	BOLT,MACHINE	4
18	PADZZ	2840-00-784-3991	91547	1-080-266-01	LINER,FUEL CONTROL	1
19	PAOZZ	5330-01-005-0508	81349	M83248/1-135	PACKING,PREFORMED	1
20	PAOZZ	5330-00-857-1457	91547	1-300-231-01	SEAL	1
21	PAOZZ	5306-01-165-2890	96906	MS9923-04	BOLT,MACHINE	6
22	PAOZZ	2840-00-656-8523	91547	1-080-274-01	HOUSING,SEAL,STARTE	1
23	PAOZZ	5330-01-006-3931	81349	M83248/1-040	PACKING,PREFORMED	1
24	PAOZZ	5330-00-166-8396	81349	M83248/1-03	PACKING,PREFORMED	1
25	PAOZZ	5330-00-893-0347	91547	~~1-300-232-02~~	SEAL,PLAIN ENCASED	1
26	PADZZ	5310-00-670-1193	91547	1-080-084-01	NUT,PLAIN,ROUND	1
27	PAOZZ	2840-00-786-1719	91547	1-080-083-02	CUP,LOCK,ACCESSORY	1
28	PAOZZ	5365-00-656-8579	91547	1-080-275-02	SPACER,PLATE	1
29	PAOZZ	5330-00-166-1022	81349	M83248/1-025	PACKING,PREFORMED	1
30	PADZZ	2840-00-475-0056	91547	1-080-269-01	PLATE,RETAINING,THR	1
31	PAOZZ	2840-00-475-0055	91547	1-080-268-01	HOUSING,ANTIFRICTIO	1
32	PADZZ	5365-00-475-0057	91547	1-080-271-01	SHIM	2
33	PADZZ	5310-00-770-8360	91547	STD3023K1	WASHER,KEY	5
34	PADZZ	5306-00-143-2297	91547	STD3053-3	BOLT,MACHINE	5

END OF FIGURE

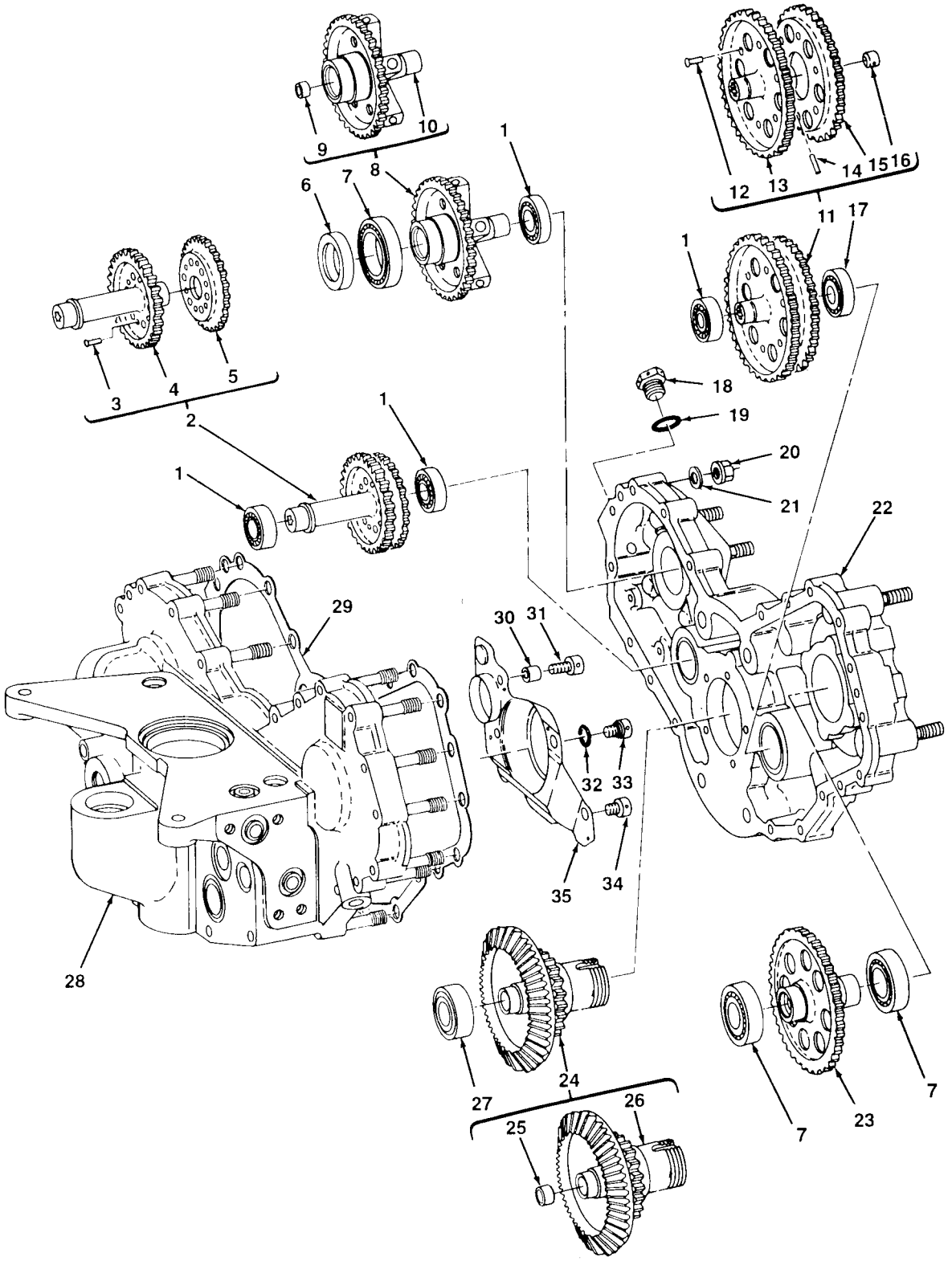

FIGURE 33. ACCESSORY DRIVE GEARBOX HOUSING ASSEMBLY, COVER ASSEMBLY, GEARSHAFT ASSEMBLIES, AND RELATED PARTS

(1)	(2)	(3)	(4)	(5)	(6)	(7)
ITEM NO	SMR CODE	NSN	CAGEC	PART NUMBER	DESCRIPTION AND USABLE ON CODE (UOC)	QTY
					GROUP 0405 ACCESSORY GEAR SECTION	
					FIG. 33 ACCESSORY DRIVE GEARBOX HOUSING ASSEMBLY,COVER ASSEMBLY,GEARSHAFT ASSEMBLIES,AND RELATED PARTS	
1	PADZZ	3110-01-258-7974	91547	2-300-941-01	BEARING,BALL,ANNULA	4
2	PADZZ	3040-01-302-4492	91547	1-080-280-03	GEARSHAFT ASSEMBLY	1
3	PADZZ	5320-01-289-5877	91547	STD3036-32	.RIVET,SOLID	6
4	XADZZ		91547	1-080-154-04	.GEARSHAFT,SPUR	1
5	XADZZ		91547	1-080-253-01	.GEAR,SPUR	1
6	PADZZ	5330-00-863-1197	91547	1-300-233-02	SEAL,PLAIN ENCASED	1
7	PADZZ	3110-01-133-3154	91547	2-300-933-01	BEARING,BALL,ANNULA	3
8	PADZZ	3040-00-896-6275	91547	1-080-370-01	GEARSHAFT,SPUR	1
9	PADZZ	4730-00-475-0052	91547	1-080-037-01	.PLUG,SHAFTGEAR,ACCE	1
10	XADZZ		91547	1-080-295-01	.GEARSHAFT,TACHOMETE	1
11	PADDD	3020-01-326-7390	91547	1-080-260-03	GEAR CLUSTER	1
12	PADZZ	5320-01-289-5877	91547	STD3036-32	.RIVET,SOLID	6
13	PADZZ	3020-00-739-2591	91547	1-080-044-03	.GEAR,SPUR	1
14	PADZZ	5315-00-619-3275	80205	NAS561C3-11	.PIN,SPRING	1
15	XADZZ		91547	1-080-251-01	.GEAR,SPUR	1
16	PADZZ	2840-00-475-0053	91547	1-080-046-01	.CUP-RETAINING,OIL P	1
17	PADZZ	3110-00-580-3254	91547	1-300-004-01	BEARING,BALL,ANNULA	1
18	PAOZZ	5365-01-053-1131	96906	MS9902-06	PLUG,MACHINE THREAD	1
19	PAOZZ	5330-00-020-0186	81349	M83248/1-906	PACKING,PREFORMED	1
20	PAOZZ	5310-00-807-1468	96906	MS21042-4	NUT,SELF-LOCKING,EX	19
21	PAOZZ	5310-00-167-0835	88044	AN960-416L	WASHER,FLAT	19
22	PADDD	2840-00-717-7801	91547	1-080-330-07	COVER ASSEMBLY,ACCE SEE FIG. 34 FOR BREAKDOWN	1
23	PADZZ	3040-00-587-3749	91547	1-080-270-04	GEARSHAFT,SPUR	1
24	PAFFF	3040-00-475-0058	91547	1-080-310-01	GEARSHAFT,MULTIPLE	1
25	PADZZ	4730-00-475-2038	91547	1-080-159-01	.PLUG,GEAR,DRIVE,OUT	1
26	XADZZ		91547	1-080-153-03	.GEARSHAFT,BEVEL-SPU	1
27	PADDD	3110-00-684-1826	91547	1-300-012-01	BEARING,ROLLER CYLI	1
28	PADDD	2840-00-587-3622	91547	1-080-340-08	HOUSING,GEARBOX,TUR SEE FIG. 35 FOR BREAKDOWN	1
29	PADZZ	5330-00-475-6972	91547	1-080-273-01	GASKET	1
30	PADZZ	5365-00-882-1658	91547	1-080-297-01	SPACER,SLEEVE	2
31	PADZZ	5305-00-846-1675	91547	STD3053-49	SCREW,CAP,SOCKET HE	2
32	PADZZ	5330-00-166-0967	81349	M83248/1-008	PACKING,PREFORMED	1
33	PADZZ	5305-00-897-6509	91547	1-080-298-01	SCREW,SHOULDER	1
34	PADZZ	5305-00-846-1676	91547	1-080-299-01	SCREW,CAP,SOCKET HE	1
35	PADZZ	2840-00-896-6274	91547	1-080-296-01	BAFFLE,ACCESSORY GE	1
					END OF FIGURE	

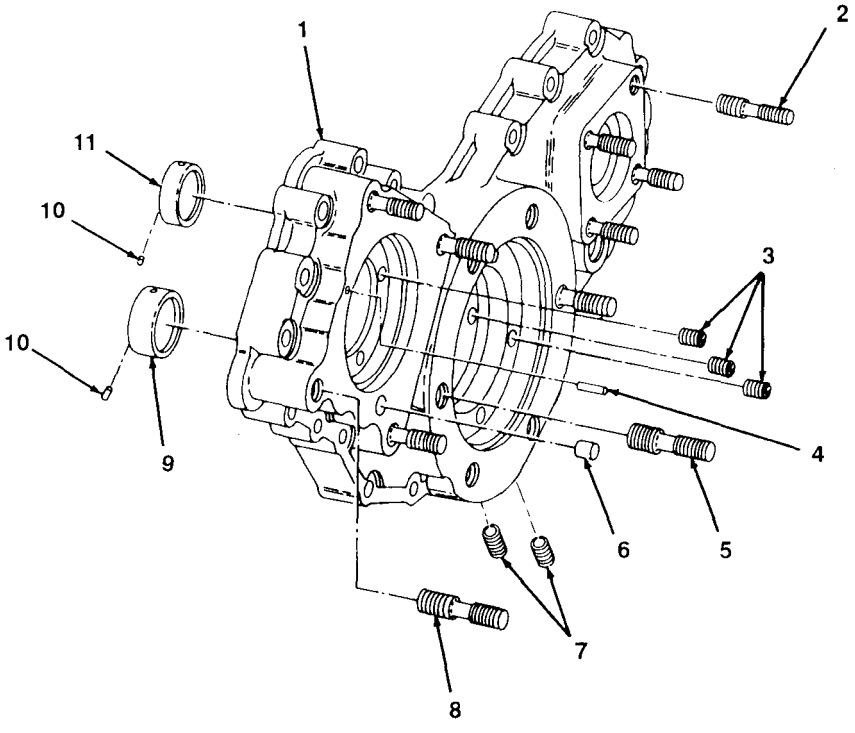

FIGURE 34. ACCESSORY DRIVE GEARBOX COVER ASSEMBLY

(1) ITEM NO	(2) SMR CODE	(3) NSN	(4) CAGEC	(5) PART NUMBER	(6) DESCRIPTION AND USABLE ON CODE (UOC)	(7) QTY
					GROUP 0405 ACCESSORY GEAR SECTION	
					FIG. 34 ACCESSORY DRIVE GEARBOX COVER ASSEMBLY	
1	XADZZ		91547	1-080-264-10	COVER ASSEMBLY,GEAR	1
2	PADZZ	5307-00-779-7297	91547	1-080-285-01N	STUD,STEPPED 0.003 IN. OVERSIZE	4
2	PADZZ	5307-00-809-6832	91547	1-080-285-01P	STUD,STEPPED 0.007 IN. OVERSIZE	4
2	PADZZ	5307-00-226-3909	91547	1-080-285-01R	STUD,STEPPED 0.012 IN. OVERSIZE	4
3	PADZZ	5340-00-597-3302	96906	MS124695	INSERT,SCREW THREAD	15
4	PADZZ	1015-01-019-7117	96906	MS171526	PIN	1
5	PADZZ	5307-00-779-7296	91547	1-080-283-01N	STUD,STEPPED 0.003 IN. OVERSIZE	2
5	PADZZ	5307-00-779-7295	91547	1-080-283-01P	STUD,STEPPED 0.007 IN. OVERSIZE	2
5	PADZZ	5307-00-066-0562	91547	1-080-283-01R	STUD,STEPPED 0.012 IN. OVERSIZE	2
6	PADZZ	5315-00-810-6370	88044	AN122729	PIN,STRAIGHT,HEADLE	1
7	PAOZZ	5340-00-291-3484	96906	MS124696	INSERT,SCREW THREAD	2
8	PADZZ	5307-00-619-5328	91547	STD3007B8N	STUD,STEPPED 0.003 IN. OVERSIZE	4
8	PADZZ	5307-00-619-5330	91547	STD3007B8P	STUD,STEPPED 0.007 IN. OVERSIZE	4
8	PADZZ	5307-00-168-2926	91547	STD3007B8R	STUD,PLAIN 0.012 IN. OVERSIZE	4
9	PADZZ	3130-00-656-8545	91547	1-080-032-01	LINER,BEARING HOUSI	1
10	PADZZ	5315-00-834-3869	91547	1-080-086-01	PIN,STRAIGHT,HEADLE	4
11	PADZZ	3130-00-656-8544	91547	1-080-031-01	LINER,BEARING HOUSI	1
					END OF FIGURE	

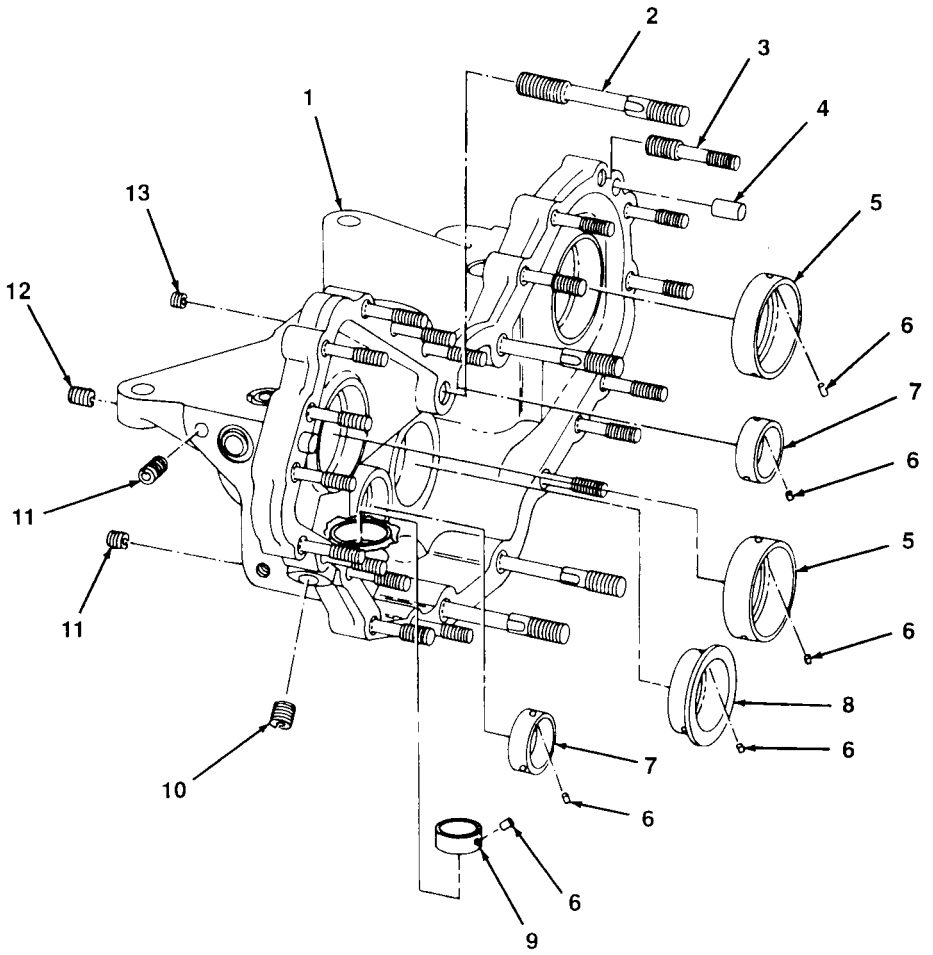

FIGURE 35. ACCESSORY DRIVE GEARBOX HOUSING ASSEMBLY

(1) ITEM NO	(2) SMR CODE	(3) NSN	(4) CAGEC	(5) PART NUMBER	(6) DESCRIPTION AND USABLE ON CODE (UOC)	(7) QTY
					GROUP 0405 ACCESSORY GEAR SECTION	
					FIG. 35 ACCESSORY DRIVE GEARBOX HOUSING ASSEMBLY	
1	XADZZ		91547	1-080-265-15	HOUSING	1
2	PADZZ	5307-00-474-8480	91547	1-080-284-01N	STUD,RECESSED AND S 0.003 IN. OVERSIZE	4
2	PADZZ	5307-00-475-9621	91547	1-080-284-01P	STUD,RECESSED AND S 0.007 IN. OVERSIZE	4
2	PADZZ	5307-00-051-9781	91547	1-080-284-01R	STUD,RECESSED AND S 0.012 IN. OVERSIZE	4
3	PADZZ	5307-00-655-7209	91547	STD3001B15N	STUD,STEPPED 0.003 IN. OVERSIZE	19
3	PADZZ	5307-00-655-7156	91547	STD3001B15P	STUD,STEPPED 0.007 IN. OVERSIZE	19
4	PBDZZ	5315-00-283-0850	88044	AN122730	PIN,STRAIGHT,HEADLE	2
5	PADZZ	5310-00-656-8547	91547	1-080-077-01	WASHER,RECESSED	2
6	PADZZ	5315-00-834-3869	91547	1-080-086-01	PIN,STRAIGHT,HEADLE	11
7	PADZZ	3130-00-656-8544	91547	1-080-031-01	LINER,BEARING HOUSI	2
8	PADZZ	3130-00-656-8546	91547	1-080-034-01	LINER,BEARING HOUSI	1
9	PADZZ	2840-00-931-8270	91547	1-080-087-01	LINER,PINION,OUTER	1
10	PADZZ	5340-00-291-3493	96906	MS124658	INSERT,SCREW THREAD	1
11	PADZZ	5340-00-290-4497	96906	MS124736	INSERT,SCREW THREAD	7
12	PADZZ	5340-00-290-4501	96906	MS124816	INSERT,SCREW THREAD	1
13	PADZZ	5340-00-597-3302	96906	MS124695	INSERT,SCREW THREAD	1
					END OF FIGURE	

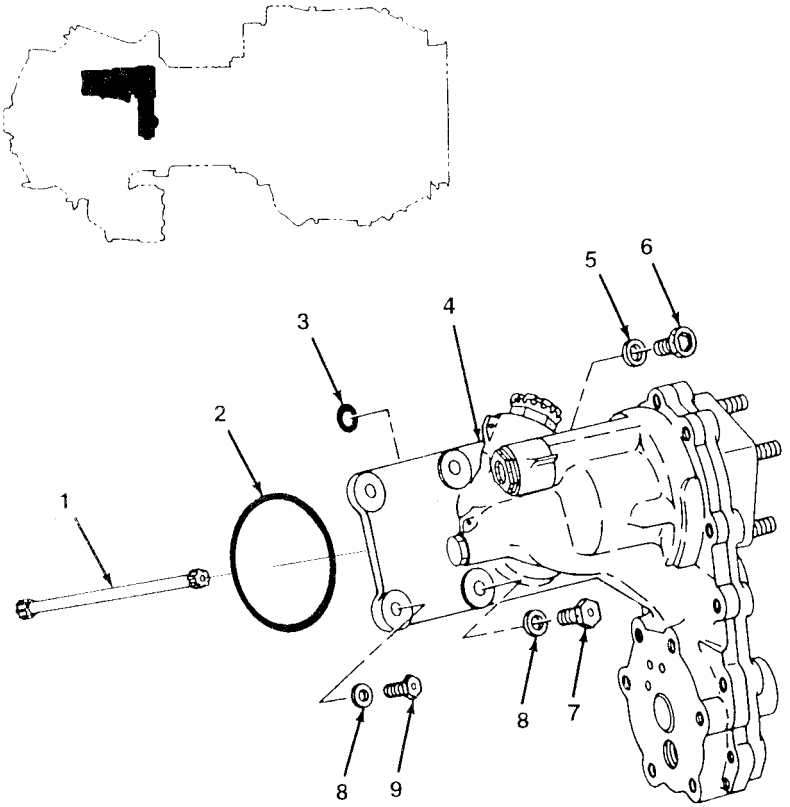

FIGURE 36. OVERSPEED GOVERNOR AND TACHOMETER DRIVE ASSEMBLY AND RELATED PARTS

(1) ITEM NO	(2) SMR CODE	(3) NSN	(4) CAGEC	(5) PART NUMBER	(6) DESCRIPTION AND USABLE ON CODE (UOC)	(7) QTY
					GROUP 0405 ACCESSORY GEAR SECTION	
					FIG. 36 OVERSPEED GOVERNOR AND TACHOMETER DRIVE ASSEMBLY AND RELATED PARTS	
1	PAOZZ	2840-00-522-2351	91547	1-160-411-01	SHAFT,OVERSPEED GOV	1
2	PAOZZ	5330-00-167-5126	81349	M83248/1-144	PACKING,PREFORMED	1
3	PAOZZ	5330-00-166-0980	81349	M83248/1-012	PACKING,PREFORMED	2
4	PAODD	2840-00-893-3787	91547	1-160-500-04	DRIVE ASSEMBLY,OVER SEE FIG. 37 FOR BREAKDOWN	1
5	PAOZZ	5310-00-893-6003	91547	1-160-566-01	WASHER,FLAT	2
6	PAOZZ	5306-00-951-0776	96906	MS9089-14	BOLT,MACHINE	2
7	PAOZZ	5306-00-259-1056	96906	MS9530-18	BOLT,MACHINE	2
8	PAOZZ	5310-00-167-0835	88044	AN960-416L	WASHER,FLAT	4
9	PAOZZ	5306-00-259-1054	96906	MS9530-13	BOLT,MACHINE	2

END OF FIGURE

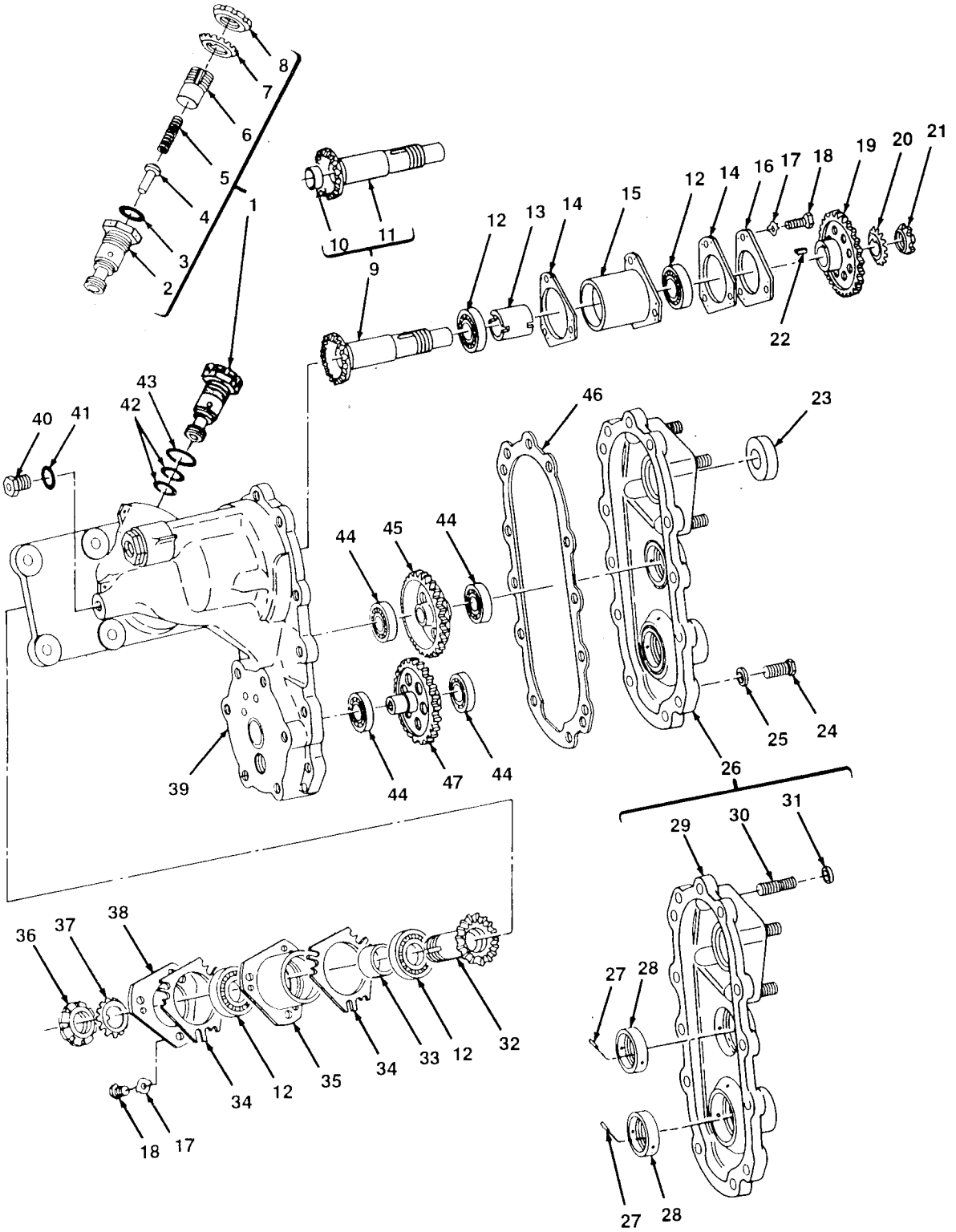

FIGURE 37. OVERSPEED GOVERNOR AND TACHOMETER DRIVE ASSEMBLY

(1)	(2)	(3)	(4)	(5)	(6)	(7)
ITEM NO	SMR CODE	NSN	CAGEC	PART NUMBER	DESCRIPTION AND USABLE ON CODE (UOC)	QTY
					GROUP 0405 ACCESSORY GEAR SECTION	
					FIG. 37 OVERSPEED GOVERNOR AND TACHOMETER DRIVE ASSEMBLY	
1	PAFFD	2840-00-537-2010	91547	1-160-420-01	VALVE ASSEMBLY,RELI	1
2	PAFZZ	2840-00-587-7090	91547	1-160-424-01	.BODY,RELIEF VALVE,O	1
3	PAFZZ	5330-00-166-0990	81349	M83248/1-014	.PACKING,PREFORMED	1
4	PAFZZ	2840-00-472-8686	91547	1-160-427-01	.PLUNGER,RELIEF VALV	1
5	PAFZZ	5360-00-831-0274	91547	1-160-452-01	.SPRING,HELICAL,COMP	1
6	PAFZZ	5305-00-537-2038	91547	1-160-425-01	.SCREW,ADJUSTING,REL	1
7	PAOZZ	5310-00-814-7325	96906	MS172272	.WASHER,KEY	1
8	PAOZZ	5310-00-842-7812	96906	MS172322	.NUT,PLAIN,ROUND	1
9	PADZZ	3040-00-533-3869	91547	1-160-490-01	GEARSHAFT,BEVEL	1
10	PADZZ	4730-00-475-0052	91547	1-080-037-01	.PLUG,SHAFTGEAR,ACCE	1
11	XADZZ		91547	1-160-417-01	.GEARSHAFT,BEVEL	1
12	PADZZ	3110-00-580-3254	91547	1-300-004-01	BEARING,BALL,ANNULA	4
13	PADZZ	5365-00-590-0542	91547	1-160-418-01	SPACER,BEARING,OVER	1
14	PADZZ	5365-00-830-4294	91547	1-160-439-01	SHIM	V
15	PADZZ	2840-00-533-3814	91547	1-160-421-01	LINER,BEARING,SHAFT	1
16	PADZZ	2840-00-600-6650	91547	1-160-448-01	PLATE,RETAINER,BEAR	1
17	PAFZZ	5310-00-770-8360	91547	STD3023K1	WASHER,KEY	6
18	PADZZ	5305-00-893-3900	91547	1-160-451-01	SCREW,MACHINE	6
19	PADZZ	3020-00-010-5511	91547	1-160-419-02	GEAR,SPUR	1
20	PAFZZ	5310-00-660-2896	96906	MS172203	WASHER,KEY	1
21	PAFZZ	5310-00-680-5671	96906	MS172238	NUT,PLAIN,ROUND	1
22	PADZZ	5315-00-241-2920	88044	AN122705	PIN,STRAIGHT,HEADLE	1
23	PAOZZ	5330-00-179-1224	91547	1-300-235-02	SEAL,PLAIN ENCASED	1
24	PAOZZ	5306-00-207-9725	88044	AN103712	BOLT,MACHINE	12
25	PAOZZ	5310-00-167-0834	88044	AN960-10L	WASHER,FLAT	12
26	PAOZZ	2840-00-533-3822	91547	1-160-450-01	COVER ASSEMBLY,OVER	1
27	PADZZ	5315-00-952-7566	96906	MS9486-03	.PIN,STRAIGHT,HEADLE	4
28	PAFZZ	5365-00-587-7091	91547	1-160-429-01	.SPACER,SLEEVE	2
29	XADZZ		91547	1-160-441-01	.COVER	1
30	PAFZZ	5307-00-637-8902	91547	1-300-267-01	.STUD,LOCKED IN	4
31	PADZZ	5365-00-405-7576	96906	MS51990-105P	.RING,LOCK,SERRATED	4
32	PADZZ	3040-00-533-3870	91547	1-160-480-01	GEARSHAFT,BEVEL	1
33	PADZZ	5365-00-833-6691	91547	1-160-418-02	SPACER,SLEEVE	1
34	PADZZ	5365-00-863-5737	91547	1-160-416-02	SHIM	V
35	PADZZ	3130-00-862-4856	91547	1-160-414-02	LINER,BEARING HOUSI	1
36	PADZZ	5310-00-842-0665	91547	1-160-404-01	NUT,PLAIN,ROUND	1
37	PADZZ	5310-00-837-8962	91547	1-160-403-01	WASHER,KEY	1
38	PADZZ	3110-00-472-9966	91547	1-160-415-01	PLATE,RETAINING,BEA	1
39	XADDD		91547	1-160-410-05	HOUSING-FILTER ASSY SEE FIG. 38 FOR BREAKDOWN	1
40	PBOZZ	5365-01-115-7425	96906	MS9902-02	PLUG,MACHINE THREAD	1
41	PAOZZ	5330-00-579-7548	80205	NAS617-2	PACKING,PREFORMED	1
42	PAOZZ	5330-00-166-0990	81349	M83248/1-014	PACKING PREFORMED	2
43	PADZZ	5330-00-531-2068	80205	NAS617-8	PACKING,PREFORMED	1
44	PADZZ	3110-01-258-7974	91547	2-300-941-01	BEARING,BALL,ANNULA	4
45	PADZZ	3020-00-226-6215	91547	1-160-422-02	GEAR,SPUR	1
46	PAOZZ	5330-00-739-6929	91547	1-160-443-01	GASKET	1
47	PADZZ	3020-00-010-5512	91547	1-160-423-02	GEAR,SPUR	1
					END OF FIGURE	

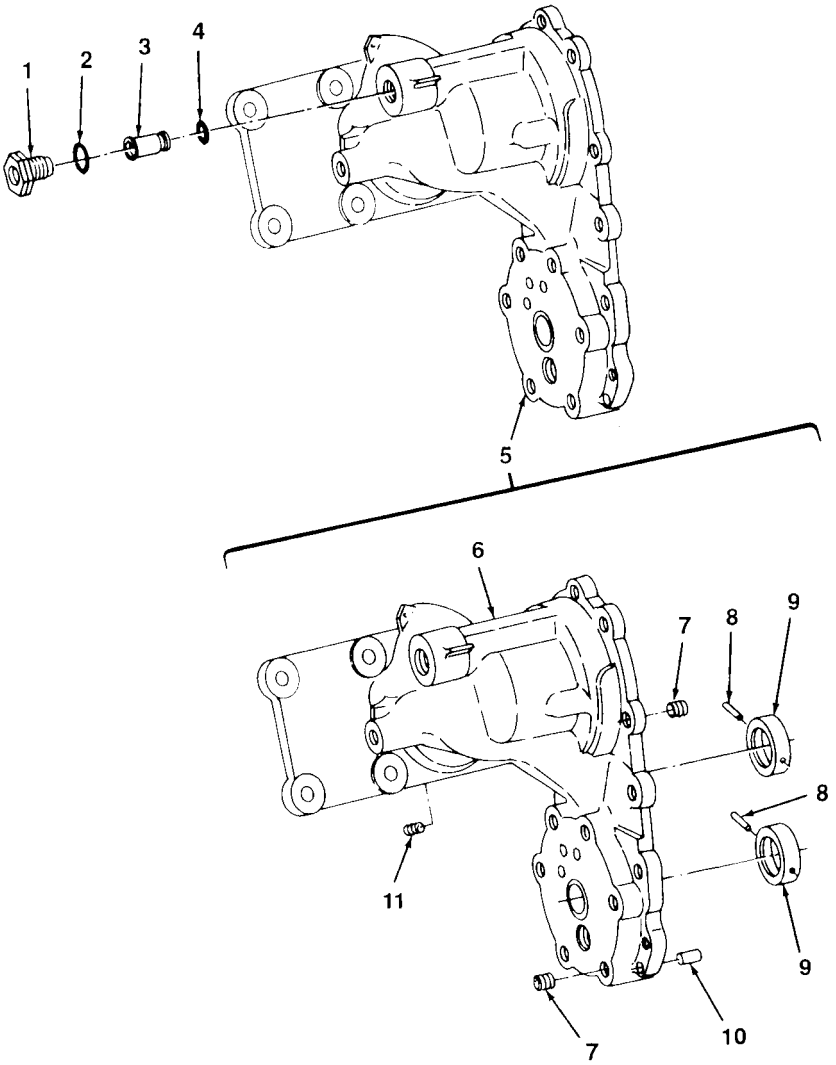

FIGURE 38. FILTER ASSEMBLY HOUSING

(1)	(2)	(3)	(4)	(5)	(6)	(7)
ITEM NO	SMR CODE	NSN	CAGEC	PART NUMBER	DESCRIPTION AND USABLE ON CODE (UOC)	QTY
					GROUP 0405 ACCESSORY GEAR SECTION	
					FIG. 38 FILTER ASSEMBLY HOUSING	
1	PAOZZ	5365-00-105-3887	91547	1-160-432-02	PLUG,MACHINE THREAD	1
2	PAOZZ	5330-00-167-5166	81349	M83248/1-905	PACKING,PREFORMED	1
3	PAOZZ	4730-00-105-9321	91547	1-300-425-01	STRAINER ELEMENT,SE	1
4	PAOZZ	5330-00-166-0969	81349	M83248/1-010	PACKING,PREFORMED	1
5	PAFFF	2840-00-860-9466	91547	1-160-510-05	HOUSING,GEARBOX,TUR	1
6	XAFZZ		91547	1-160-442-06	.HOUSING,GEARBOX,TUR	1
7	PAFZZ	5340-00-597-3302	96214	416936-52	.INSERT,SCREW THREAD	21
8	PAFZZ	5315-00-952-7566	96906	MS9486-03	.PIN,STRAIGHT,HEADLE	4
9	PAFZZ	5365-00-587-7091	91547	1-160-429-01	.SPACER,SLEEVE	2
10	PAFZZ	5315-00-241-2920	88044	AN122705	.PIN,STRAIGHT,HEADLE	2
11	PAFZZ	5340-00-290-4480	96906	MS124735	.INSERT,SCREW THREAD	3
					END OF FIGURE	

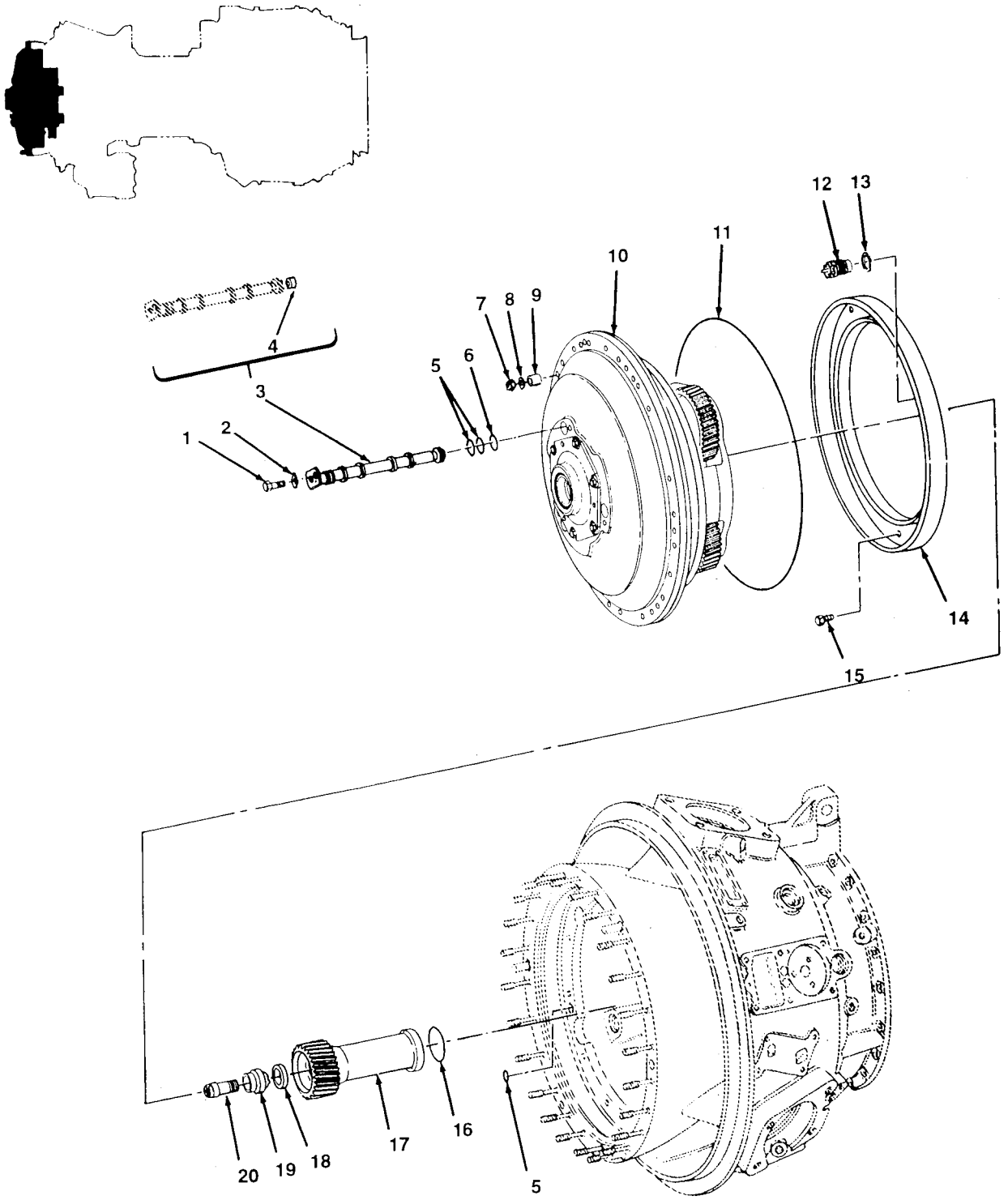

FIGURE 39. OUTPUT REDUCTION CARRIER AND GEAR ASSEMBLY AND RELATED PARTS

GROUP 0405 ACCESSORY GEAR SECTION

FIG.39 OUTPUT REDUCTION CARRIER AND GEAR ASSEMBLY AND RELATED PARTS

(1) ITEM NO.	(2) SMR CODE	(3) NSN	(4) CAGEC	(5) PART NUMBER	(6) DESCRIPTION AND USABLE ON CODE (UOC)	(7) QTY
1	PAOZZ	5306–00–054–1435	96906	MS9501–08	BOLT, MACHINE	3
2	PAFZZ	5310–00–658–5299	91547	STD3023K2	WASHER, KEY	3
3	PAOZZ	4710–00–924–3634	91547	1–030–330–03	TUBE, OIL TRANSFER	3
4	PAFZZ	2840–00–739–6927	91547	1–030–280–01	. STRAINER ASSEMBLY, OIL	1
5	PAOZZ	5330–00–166–0990	81349	M83248/1–014	PACKING, PREFORMED	7
6	PAOZZ	5330–00–166–0988	81349	M83248/1–013	PACKING, PREFORMED	3
7	PAFZZ	5310–00–807–1468	96906	MS21042–4	NUT, SELF–LOCKING, EX	24
8	PAFZZ	5310–00–167–0835	88044	AN960–416L	WASHER, FLAT	24
9	PAFZZ	5365–00–784–3994	91547	1–030–069–01	SPACER, SLEEVE	24
10	ADFDD	2840–01–459–1267	91547	1–030–350–18	CARRIER AND GEAR AS SEE FIG. 40 AND 40A FOR BREAKDOWN	1
10	PAFDD	2840–01–462–0765	91547	1–030–350–19	CARRIER AND GEAR AS SEE FIG. 41 AND 41A FOR BREAKDOWN	1
11	PAFZZ	5330–00–766–8653	91457	1–020–017–01	PACKING, PREFORMED	1
12	PAFZZ	4820–00–876–8715	91547	1–030–040–08	VALVE, REGULATING, FL	1
13	PAFZZ	5365–00–655–8155	91547	1–030–073–01	SHIM	V
14	PAFZZ	2840–00–977–1039	91547	1–060–121–03	CYLINDER, TORQUEMETE	1
15	PAFZZ	5306–00–229–0355	96906	MS9584–06	BOLT, MACHINE	12
16	PADZZ	5330–00–167–5116	81349	M83248/1–128	PACKING, PREFORMED	1
17	PADZZ	3040–00–878–5940	91547	1–030–192–04	GEARSHAFT, HELICAL	1
18	PADZZ	5310–00–613–7435	91547	1–030–138–04	WASHER, CONVEX	1
19	PADZZ	2840–00–084–7661	91547	1–030–141–03	RETAINER, BOLT, SUN G	1
20	PADZZ	5603–00–739–6922	91547	1–030–139–02	BOLT, INTERNALLY REL	1

END OF FIGURE

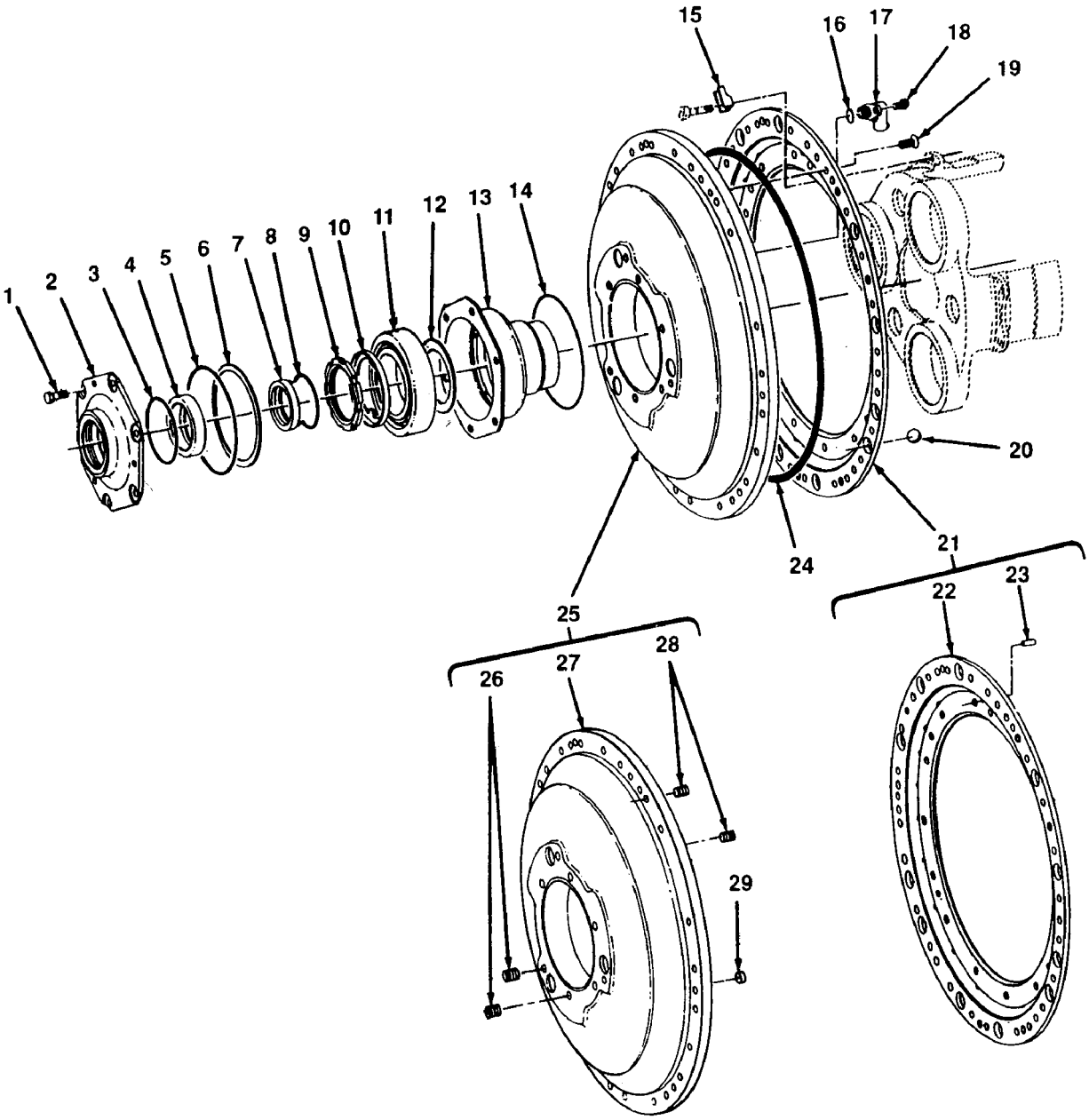

FIGURE 40. OUTPUT REDUCTION CARRIER AND GEAR ASSEMBLY (1–030–350–18), OIL SEAL RETAINER, BEARING, BEARING SUPPORT LINER, REDUCTION GEAR HOUSING, TORQUEMETER PLATE ASSEMBLY, AND RELATED PARTS

GROUP 0405 ACCESSORY GEAR SECTION

FIG. 40 OUTPUT REDUCTION CARRIER AND GEAR ASSEMBLY (1–030–350–18), OIL SEAL RETAINER, BEARING, BEARING SUPPORT LINER, REDUCTION GEAR HOUSING, TORQUEMETER PLATE ASSEMBLY, AND RELATED PARTS

(1) ITEM NO.	(2) SMR CODE	(3) NSN	(4) CAGEC	(5) PART NUMBER	(6) DESCRIPTION AND USABLE ON CODE (UOC)	(7) QTY
1	PAOZZ	5305–00–206–6814	88044	AN106508	SCREW, CAP, HEXAGO	6
2	PAOZZ	5330–00–945–0209	91547	1–030–229–03	RETAINER, OIL SEAL	1
3	PAOZZ	5331–00–167–5126	81349	M83248/1–144	PACKING, PREFORMED	1
4	PAOZZ	5330–00–410–8153	99193	1–300–334–04	SEAL, PLAIN ENCASED	1
5	PAOZZ	5330–00–111–3713	96906	MS9388–045	PACKING, PREFORMED	1
6	PAFZZ	5365–00–916–2424	91547	1–030–212–01	SPACER, RING 0.035 – 0.037 IN. THK	V
6	PAFZZ	5365–00–916–2425	91547	1–030–212–02	SPACER, RING 0.038 – 0.040 IN. THK	V
6	PAFZZ	5365–00–916–2427	91547	1–030–212–03	SPACER, RING 0.041 – 0.043 IN. THK	V
6	PAFZZ	5365–00–761–3647	91547	1–030–212–04	SPACER, RING 0.044 – 0.046 IN. THK	V
7	PAFZZ	2840–00–924–3649	91547	1–030–067–02	PLATE, OUTPUT GEARSH	1
8	PAOZZ	5331–01–005–0508	81349	M83248/1–135	PACKING, PREFORMED	1
9	PADZZ	5310–00–844–7569	91547	1–030–023–02	NUT, PLAIN, ROUND	1
10	PADZZ	2840–00–945–0208	91547	1–030–165–03	CUP, BEARING RETAINI	1
11	PADDD	3110–01–460–6025	91547	1–300–669–01	BEARING, BALL, ANNULA	1
12	PADZZ	5365–00–915–5967	91547	1–030–217–01	SPACER, RING	1
13	PADZZ	2840–00–915–5994	91547	1–030–187–03	LINER, BEARING SUPPO	1
14	PADZZ	5330–00–916–2407	91547	STD3019C62	PACKING, PREFORMED	1
15	PADZZ	2840–00–939–7718	91547	1–030–185–01	CLAMP, PLATE ASSEMBL	6
16	PADZZ	5330–00–580–5939	96906	MS29561–009	PACKING, PREFORMED	1
17	PADZZ	4730–00–954–6199	91547	1–030–460–01	CAP, LUBRICATION FIT	1
18	PADZZ	5306–00–282–8637	88044	AN106408	BOLT, MACHINE	2
19	PADZZ	5305–00–071–1320	96906	MS51960–63	SCREW, MACHINE	3
20	PADZZ	3110–00–780–2720	91547	1–020–015–01	BALL, TORQUEMETER	18
21	PADZZ	2840–00–894–6531	91547	1–030–240–02	PLATE ASSEMBLY, TORQ	1
22	PADZZ	3110–01–281–3890	91547	1–030–123–02	.PLATE, RETAINING, BEA	1
23	PADZZ	5315–00–828–3234	96906	MS9105–56	.PIN, STRAIGHT, HEADLE	1
24	PADZZ	5330–00–766–8653	91547	1–020–017–01	PACKING, PREFORMED	1
25	PADDD	2840–01–460–6076	91547	1–030–390–08	HOUSING, REDUCTION G	1
25	PADDD	2840–00–954–6117	91547	1–030–390–05	HOUSING, REDUCTION G, ALTERNATE TO P/N 1–030–390–08	1
26	PADZZ	5340–00–290–4497	96906	MS124736	.INSERT, SCREW THREAD	9
27	XADZZ		91547	1–030–186–07	.HOUSING, COVER, COMPONENT OF P/N 1–030–390–05	1
27	XADZZ		91547	1–030–186–09	.HOUSING, COVER, COMPONENT OF P/N 1–030–390–08	1
28	PADZZ	5340–00–290–4480	96906	MS124735	.INSERT, SCREW THREAD	5
29	XADZZ		91547	1–030–209–02	.PLUG, OIL JET	3

END OF FIGURE

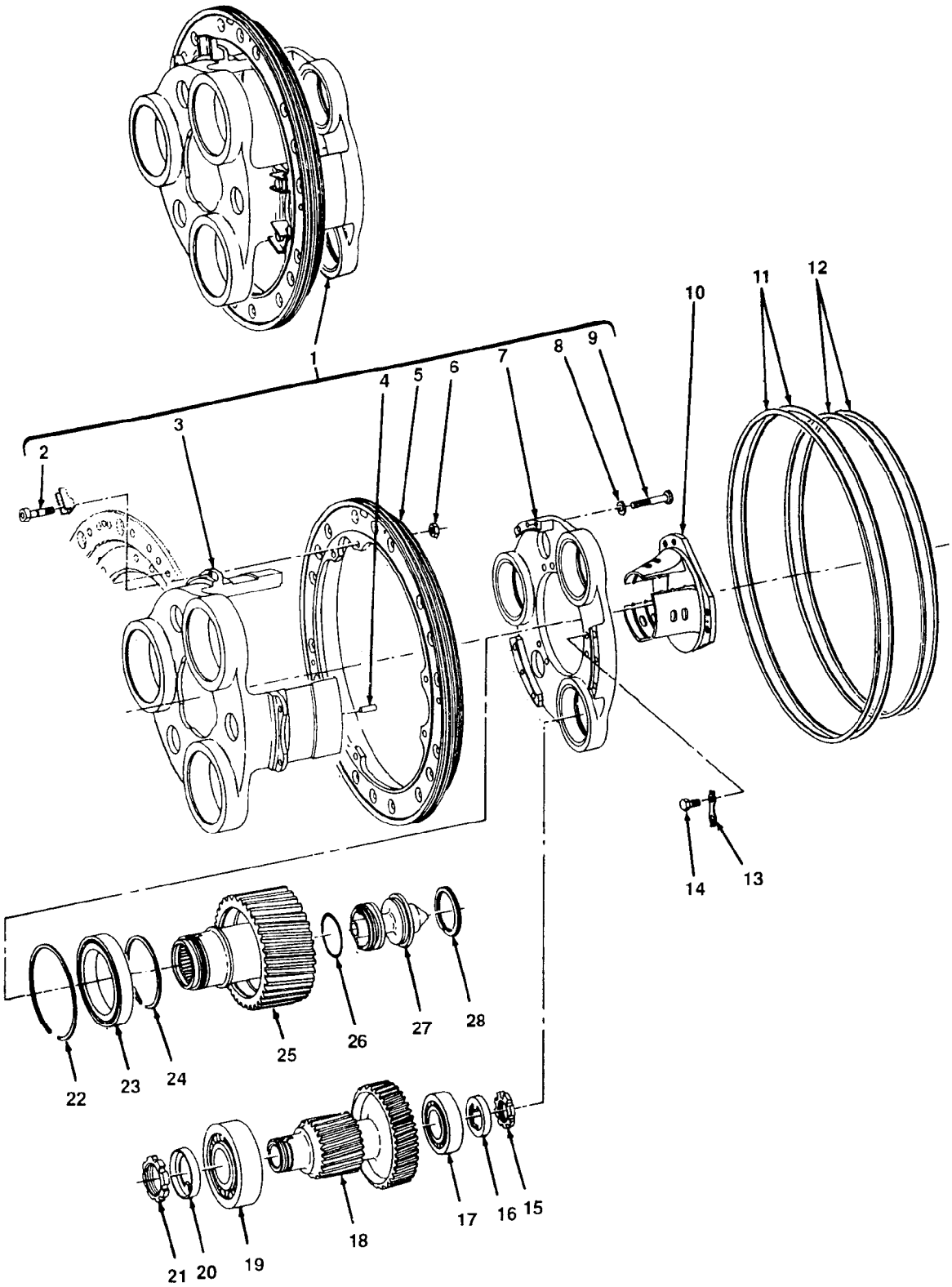

FIGURE 40A. OUTPUT REDUCTION CARRIER AND GEAR ASSEMBLY (1–030–350–18), PLANETARY CARRIER ASSEMBLY, GEARSHAFTS, REAR TORQUEMETER PLATE ASSEMBLY, AND RELATED PARTS

GROUP 0405 ACCESSORY GEAR SECTION

FIG. 40A OUTPUT REDUCTION CARRIER AND GEAR ASSEMBLY (1–030–350–18), PLANETARY CARRIER ASSEMBLY, GEARSHAFTS, REAR TORQUEMETER PLATE ASSEMBLY, AND RELATED PARTS

(1) ITEM NO.	(2) SMR CODE	(3) NSN	(4) CAGEC	(5) PART NUMBER	(6) DESCRIPTION AND USABLE ON CODE (UOC)	(7) QTY
1	PADDD	2840–00–954–6142	91547	1–030–340–04	CARRIER ASSEMBLY, PL	1
2	PADZZ	5306–00–947–3552	91547	1–030–203–01	.BOLT, MACHINE	6
3	XADZZ		91547	1–030–182–03	.CARRIER, PLANETARY	1
4	PBDZZ	5315–00–852–7430	91547	1–030–172–01	.PIN, STRAIGHT, HEADLE	3
5	XADZZ		91547	1–030–183–03	.PLATE, TORQUEMETER, R	1
6	PADZZ	5310–00–846–1658	91547	1–030–129–01	.NUT, PLAIN, SLOTTED, H	6
7	XADZZ		91547	1–030–181–01	.CARRIER, PLANETARY R	1
8	PADZZ	5310–00–167–0814	88044	AN960C516L	.WASHER, FLAT	6
9	PADZZ	5306–00–990–9291	88044	AN107520	.BOLT, MACHINE	6
10	PADZZ	2840–00–954–6185	91547	1–030–450–02	DEFLECTOR ASSEMBLY, OIL	1
11	PAFZZ	5330–00–062–4405	91547	1–020–154–02	SEAL RING, METAL	2
12	PAFZZ	2840–00–062–4406	91547	1–020–155–02	SEAL RING, METAL	2
13	PAFZZ	5310–00–917–7140	91547	1–100–069–01	WASHER, KEY	3
14	PAFZZ	5306–00–281–9549	88044	AN104706	BOLT, MACHINE	6
15	PADZZ	5310–00–515–7592	96906	MS172241	NUT, PLAIN, ROUND	3
16	PADZZ	2840–00–944–4853	91547	1–030–211–01	CUP, BEARING RETAIN	3
17	PADDD	3110–01–460–6056	91547	1–300–667–01	BEARING, ROLLER, CYLI	3
18	PADZZ	3040–01–459–1398	91547	1–030–193–05	GEARSHAFT, HELICAL	3
19	PADDD	3110–01–460–6073	91547	1–300–666–01	BEARING, ROLLER, CYLI	3
20	PADZZ	2840–00–944–4852	91547	1–030–195–01	CUP, GEARSHAFT BEAR	3
21	PADZZ	5310–00–916–2419	91547	1–030–194–02	NUT, PLAIN, ROUND	3
22	PADZZ	5325–01–459–1437	91547	1–030–273–02	RING, RETAINING	1
23	PADDD	3110–01–459–1410	91547	1–300–682–01	BEARING, ROLLER, CYLI	1
24	PADZZ	5365–00–952–7451	91547	1–300–338–01	RING, RETAINING	1
25	PADZZ	3040–01–459–1408	91547	1–030–191–14	GEARSHAFT, HELICAL	1
26	PAFZZ	5330–00–194–1675	81349	M83248/1–222	PACKING, PREFORMED	1
27	PAFZZ	2840–01–174–8123	91547	1–030–265–01	PLUG ASSEMBLY, OUTPUT GE	1
28	PADZZ	5365–00–530–5898	81349	M27426–3152D	RING, RETAINING	1

END OF FIGURE

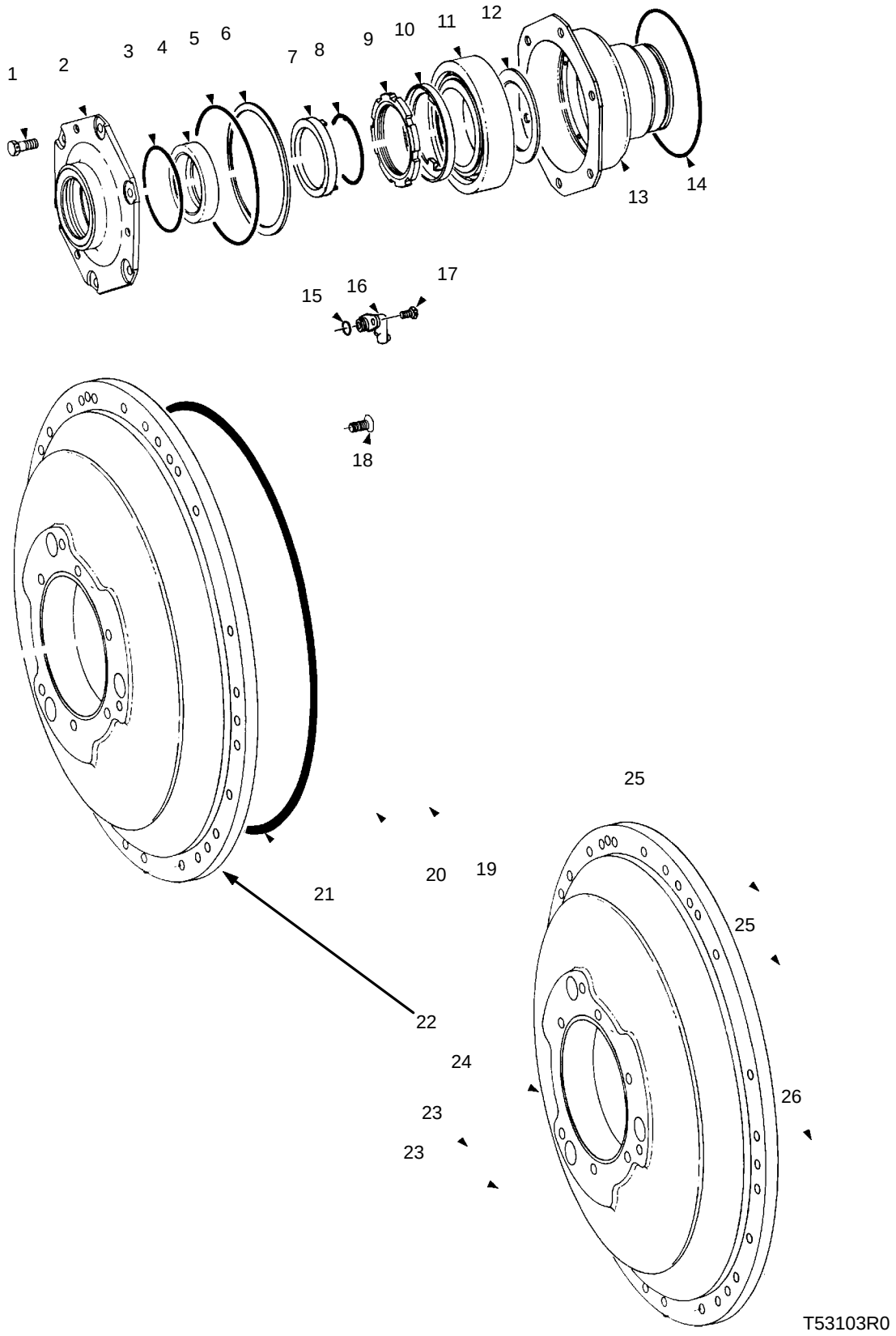

FIGURE 41. OUTPUT REDUCTION CARRIER AND GEAR ASSEMBLY (1–030–350–19), OIL SEAL RETAINER, BEARING, BEARING SUPPORT LINER, REDUCTION GEAR HOUSING, TORQUEMETER PLATE ASSEMBLY, AND RELATED PARTS

(1) ITEM NO.	(2) SMR CODE	(3) NSN	(4) CAGEC	(5) PART NUMBER	(6) DESCRIPTION AND USABLE ON CODE (UOC)	(7) QTY
					GROUP 0405 ACCESSORY GEAR SECTION	
					FIG. 41 OUTPUT REDUCTION CARRIER AND GEAR ASSEMBLY (1–030–350–19), OIL SEAL RETAINER, BEARING, BEARING SUPPORT LINER, REDUCTION GEAR HOUSING, TORQUEMETER PLATE ASSEMBLY, AND RELATED PARTS	
1	PAOZZ	5305–00–206–6814	88044	AN106508	SCREW, CAP, HEXAGO	6
2	PAOZZ	5330–00–945–0209	91547	1–030–229–03	RETAINER, OIL SEAL	1
3	PAOZZ	5331–00–167–5126	81349	M83248/1–144	PACKING, PREFORMED	1
4	PAOZZ	5330–00–410–8153	91547	1–300–334–04	SEAL, PLAIN ENCASED	1
5	PAOZZ	5331–01–013–3718	81349	M83248/1–045	PACKING, PREFORMED	1
6	PAFZZ	5365–00–916–2424	91547	1–030–212–01	SPACER, RING 0.035 – 0.037 IN. THK	V
6	PAFZZ	5365–00–916–2425	91547	1–030–212–02	SPACER, RING 0.038 – 0.040 IN. THK	V
6	PAFZZ	5365–00–916–2427	91547	1–030–212–03	SPACER, RING 0.041 – 0.043 IN. THK	V
6	PAFZZ	5365–00–761–3647	91547	1–030–212–04	SPACER, RING 0.044 – 0.046 IN. THK	V
7	PAFZZ	2840–00–924–3649	91547	1–030–067–02	PLATE, OUTPUT GEARSH	1
8	PAOZZ	5331–01–005–0508	81349	M83248/1–135	PACKING, PREFORMED	1
9	PADZZ	5310–00–844–7569	91547	1–030–023–02	NUT, PLAIN, ROUND	1
10	PADZZ	2840–00–945–0208	91547	1–030–165–03	CUP, BEARING RETAINI	1
11	PADDD	3110–01–460–6025	99193	1–300–669–01	BEARING, BALL, ANNULA	1
12	PADZZ	5365–00–915–5967	91547	1–030–217–01	SPACER, RING	1
13	PADZZ	2840–00–915–5994	91547	1–030–187–03	LINER, BEARING SUPPO	1
14	PADZZ	5330–00–916–2407	91547	STD3019C62	PACKING, PREFORMED	1
15	PADZZ	5330–00–580–5939	96906	MS29561–009	PACKING, PREFORMED	1
16	PADZZ	4730–00–954–6199	91547	1–030–460–01	CAP, LUBRICATION FIT	1
17	PADZZ	5306–00–282–8637	88044	AN106408	BOLT, MACHINE	2
18	PADZZ	5305–00–071–1320	96906	AN510C10–6	SCREW, MACHINE	3
19	PADZZ	3110–00–780–2720	91547	1–020–015–01	BALL, TORQUEMETER	18
20	PADZZ	2840–01–462–0740	99193	1–030–123–06	PLATE ASSEMBLY, TORQ	1
21	PADZZ	5330–00–766–8653	91547	1–020–017–01	PACKING, PREFORMED	1
22	PADDD	2840–01–460–6076	91547	1–030–390–08	HOUSING, REDUCTION G	1
23	PADZZ	5340–00–290–4497	96906	MS124736	.INSERT, SCREW THREAD	9
24	XADZZ		91547	1–030–186–09	.HOUSING, COVER, COMPONENT OF P/N 1–030–390–08	1
25	PADZZ	5340–00–290–4480	96906	MS124735	.INSERT, SCREW THREAD	5
26	XDDZZ		91547	1–030–209–02	.PLUG, OIL JET	3

END OF FIGURE

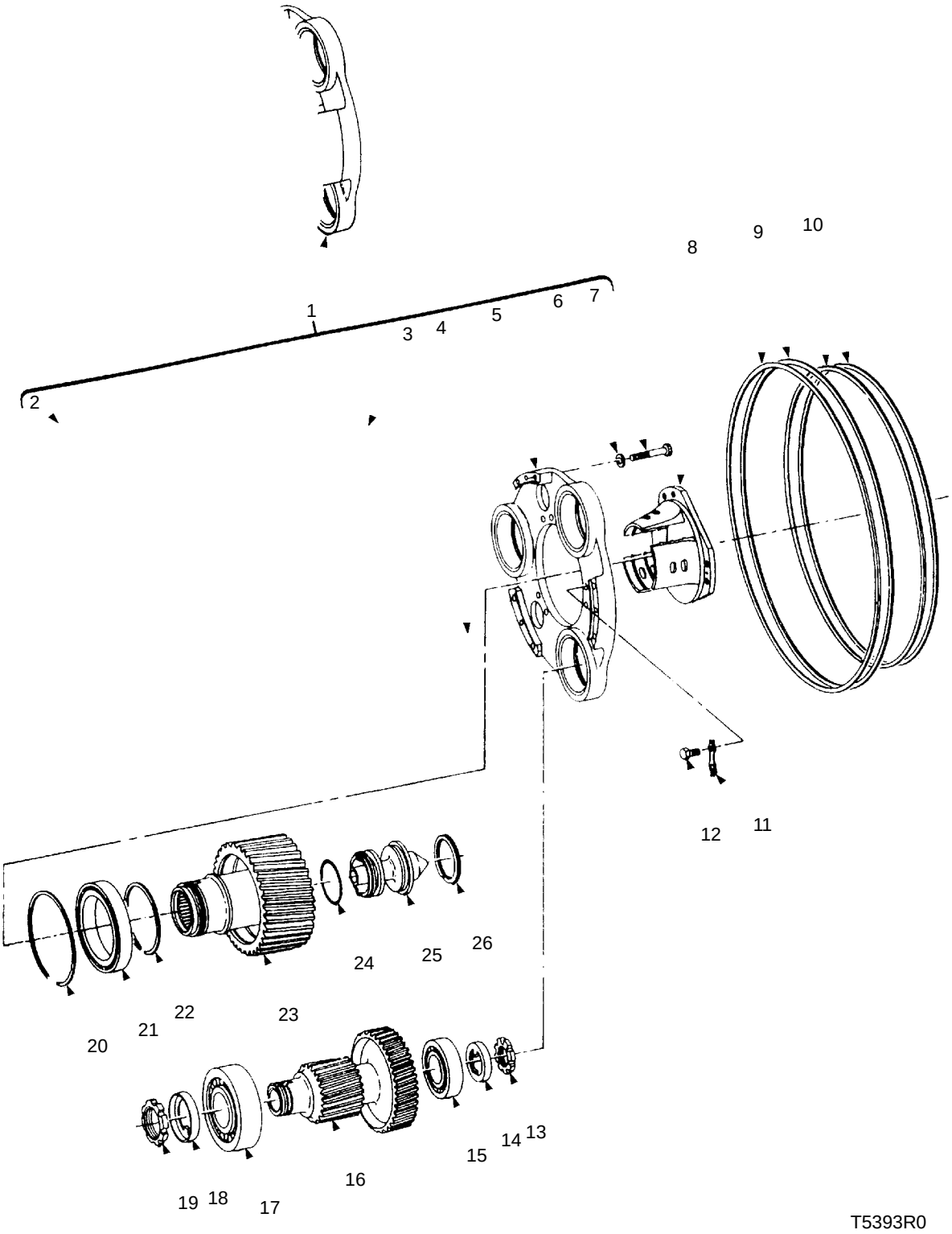

FIGURE 41A. OUTPUT REDUCTION CARRIER AND GEAR ASSEMBLY (1–030–350–19), PLANETARY CARRIER ASSEMBLY, GEARSHAFTS, REAR TORQUEMETER PLATE ASSEMBLY, AND RELATED PARTS

GROUP 0405 ACCESSORY GEAR SECTION

FIG. 41A OUTPUT REDUCTION CARRIER AND GEAR ASSEMBLY (1–030–350–19), PLANETARY CARRIER ASSEMBLY, GEARSHAFTS, REAR TORQUEMETER PLATE ASSEMBLY, AND RELATED PARTS

(1) ITEM NO.	(2) SMR CODE	(3) NSN	(4) CAGEC	(5) PART NUMBER	(6) DESCRIPTION AND USABLE ON CODE (UOC)	(7) QTY
1	PADDD		99193	1–030–340–05	CARRIER ASSEMBLY, PL	1
2	PADZZ	5360–00–115–1323	96906	MS9566–10	.BOLT, MACHINE	6
3	XADZZ		99193	1–030–271–02	.CARRIER, REDUCTION GEAR FRONT	1
4	PBDZZ	5315–00–852–7430	91547	1–030–172–01	.PIN, STRAIGHT, HEADLE	3
5	XADZZ		91547	1–030–181–01	.CARRIER, PLANETARY R	1
6	PADZZ	5310–00–167–0814	88044	AN960C516L	.WASHER, FLAT	6
7	PADZZ	5306–00–990–9291	88044	AN107520	.BOLT, MACHINE	6
8	PADZZ	2840–00–954–6185	91547	1–030–450–02	DEFLECTOR ASSEMBLY, OIL	1
9	PAFZZ	5330–00–062–4405	91547	1–020–154–02	SEAL RING, METAL	2
10	PAFZZ	2840–00–062–4406	91547	1–020–155–02	SEAL RING, METAL	2
11	PAFZZ	5310–00–917–7140	91547	1–100–069–01	WASHER, KEY	3
12	PAFZZ	5306–00–281–9549	88044	AN104706	BOLT, MACHINE	6
13	PADZZ	5310–00–515–7592	96906	MS172241	NUT, PLAIN, ROUND	3
14	PADZZ	2840–00–944–4853	91547	1–030–211–01	CUP, BEARING RETAIN	3
15	PADDD	3110–01–460–6056	91547	1–300–667–01	BEARING, ROLLER, CYLI	3
16	PADZZ	3040–01–459–1398	99193	1–030–193–05	GEARSHAFT, HELICAL	3
17	PADDD	3110–01–460–6073	99193	1–300–666–01	BEARING, ROLLER, CYLI	3
18	PADZZ	2840–00–944–4852	91547	1–030–195–01	CUP, GEARSHAFT BEAR	3
19	PADZZ	5310–00–916–2419	91547	1–030–194–02	NUT, PLAIN, ROUND	3
20	PADZZ	5325–01–459–1437	99193	1–030–273–02	RING, RETAINING	1
21	PADDD	3110–01–459–1410	99193	1–300–682–01	BEARING, ROLLER, CYLI	1
22	PADZZ	5365–00–952–7451	91547	1–300–338–01	RING, RETAINING	1
23	PADZZ	3040–01–459–1408	99193	1–030–191–14	GEARSHAFT, HELICAL	1
24	PAFZZ	5330–00–194–1675	81349	M83248/1–222	PACKING, PREFORMED	1
25	PAFZZ	2840–01–174–8123	91547	1–030–265–01	PLUG ASSEMBLY, OUTPUT GE	1
26	PADZZ	5365–00–530–5898	81349	M27426–3152D	RING, RETAINING	1

END OF FIGURE

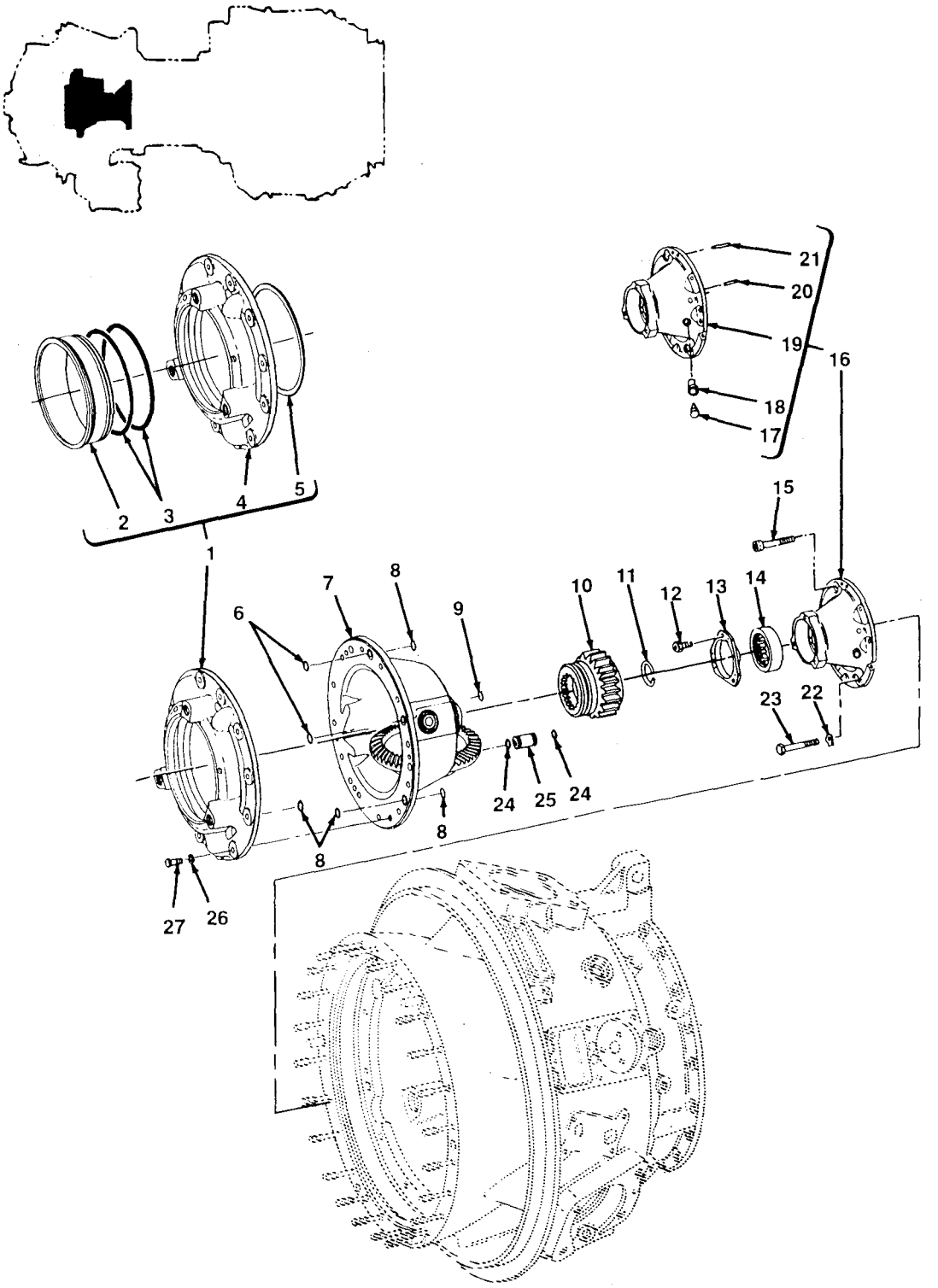

FIGURE 42. ACCESSORY DRIVE CARRIER ASSEMBLY, POWER SHAFT BEARING RETAINER ASSEMBLY, AND RELATED PARTS

(1) ITEM NO.	(2) SMR CODE	(3) NSN	(4) CAGEC	(5) PART NUMBER	(6) DESCRIPTION AND USABLE ON CODE (UOC)	(7) QTY
					GROUP 0405 ACCESSORY GEAR SECTION	
					FIG. 42 ACCESSORY DRIVE CARRIER ASSEMBLY, POWER SHAFT BEARING RETAINER ASSEMBLY, AND RELATED PARTS	
1	PADDD	2840–00–915–5933	91547	1–030–400–01	SUPPORT, OIL TRANSFE	1
2	PADZZ	2840–00–939–5952	91547	1–030–214–01	.SLEEVE, SEAL OIL TRA	1
3	PADZZ	5330–00–916–2408	91547	STD3019C166	.PACKING, PREFORMED	2
4	PADZZ	2840–00–916–2415	91547	1–030–213–01	.SUPPORT, OIL TRANSFE	1
5	PADZZ	5365–00–916–2391	91547	1–300–326–01	.RING, RETAINING	1
6	PAOZZ	5330–00–166–0988	81349	M83248/1–013	PACKING, PREFORMED	2
7	ADDDD	2840–01–458–8639	91547	1–070–220–10	CARRIER ASSEMBLY, AC SEE FIG. 43 FOR BREAKDOWN	1
8	PADZZ	5330–00–166–0991	81349	M83248/1–015	PACKING, PREFORMED	4
9	PAOZZ	5330–00–166–0990	81349	M83248/1–014	PACKING, PREFORMED	1
10	PADZZ	3020–00–945–4562	91547	1–070–072–03	GEAR, SPUR	1
11	PADZZ	5365–00–952–7570	91547	1–100–346–02	RING, RETAINING	1
12	PAFZZ	5306–00–229–0355	96906	MS9584–06	BOLT, MACHINE	3
13	PADZZ	2840–00–949–7809	91547	1–060–082–01	PLATE, LOCKING, POWER 0.1137 – 0.1149 IN. THK	1
13	PADZZ	2840–00–945–5601	91547	1–060–082–02	PLATE, LOCKING, POWER 0.1150 – 0.1163 IN. THK, ALTERNATE TO P/N 1–060–082–01	1
13	PADZZ	2840–00–945–8096	91547	1–060–082–03	PLATE, LOCKING, POWER 0.1164 – 0.1176 IN. THK, ALTERNATE TO P/N 1–060–082–01	1
13	PADZZ	2840–00–945–8095	91547	1–060–082–04	PLATE, LOCKING, POWER 0.1177 – 0.1190 IN. THK, ALTERNATE TO P/N 1–060–082–01	1
13	PADZZ	2840–00–945–4532	91547	1–060–082–05	PLATE, LOCKING, POWER 0.1191 – 0.1203 IN. THK, ALTERNATE TO P/N 1–060–082–01	1
14	PADZZ	3110–00–898–9692	91547	1–300–082–03	BEARING, ROLLER, CYLI	1
15	PADZZ	5305–00–879–1447	91547	STD3022–123	SCREW, CAP, SOCKET HE	4
16	PADZZ	2840–00–975–0254	91547	1–060–090–03	RETAINER ASSEMBLY, B	1
17	XADZZ		91547	1–060–152–02	.PLUG, FITTING–BEARIN	1
18	PBDZZ	2840–00–130–5960	91547	1–060–153–01	.FITTING, BEARING RET	1
19	XADZZ		91547	1–060–081–04	.RETAINER, BEARING	1
20	PBDZZ	5315–00–903–7349	96906	MS9486–24	.PIN, STRAIGHT, HEADLE	4
21	XDDZZ		88044	AN150279	.PIN, STRAIGHT, HEAD	1
22	PAOZZ	5310–00–083–8364	91547	STD3018K11	WASHER, KEY	2
23	PADZZ	5306–00–400–0048	96906	MS9490–28	BOLT, MACHINE	2
24	PADZZ	5330–00–166–0967	81349	M83248/1–008	PACKING, PREFORMED	2
25	PADZZ	4710–00–659–9618	91547	1–060–128–01	TUBE, OIL TRANSFER, C	1
26	PAFZZ	5310–00–531–9515	88044	AN960C416	WASHER, FLAT	12
27	PAFZZ	5306–00–263–8645	96906	MS9584–19	BOLT, MACHINE	12

END OF FIGURE

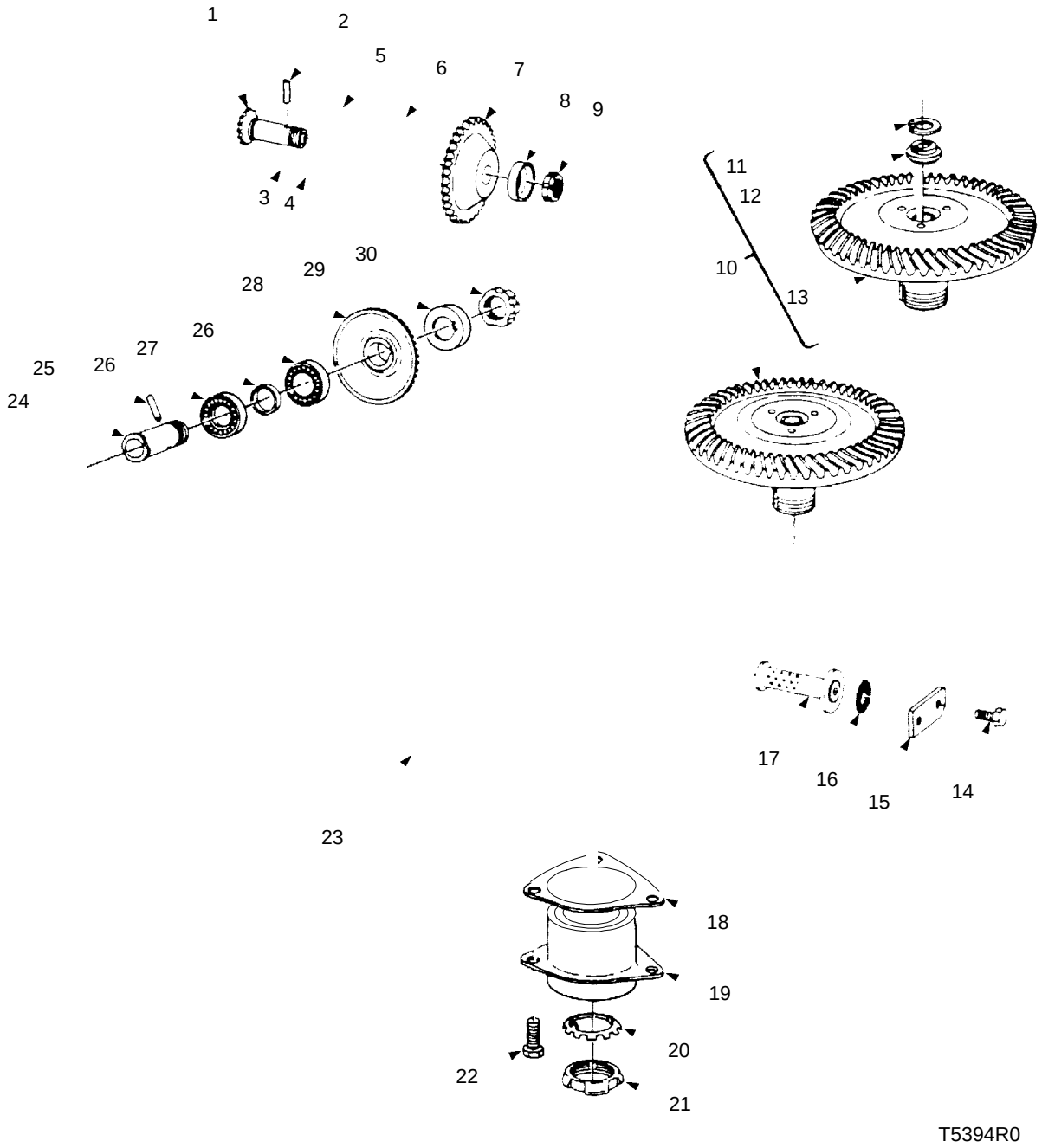

FIGURE 43. ACCESSORY DRIVE CARRIER ASSEMBLY (1–070–220–10)

GROUP 0405 ACCESSORY GEAR SECTION

FIG. 43 ACCESSORY DRIVE CARRIER ASSEMBLY (1–070–220–10)

(1) ITEM NO.	(2) SMR CODE	(3) NSN	(4) CAGEC	(5) PART NUMBER	(6) DESCRIPTION AND USABLE ON CODE (UOC)	(7) QTY
1	PADZZ	3040–00–915–5999	91547	1–070–063–02	GEARSHAFT, BEVEL	1
2	PADZZ	5315–00–812–0091	96906	MS9105–58	PIN, STRAIGHT, HEADLE	1
3	PADZZ	5306–00–763–2581	96906	MS9565–08	BOLT, DRILLED HEX HEAD	3
4	PADZZ	5310–00–167–0812	91547	AN960C10L	WASHER	3
5	PADZZ	5365–01–459–5926	99193	1–070–125–01	SHIM, ACCESSORY DRIVE PINION LOCATION 0.020 – 0.024 IN. THK	1
5	PADZZ	5365–01–459–5928	99193	1–070–125–02	SHIM, ACCESSORY DRIVE PINION LOCATION 0.025 – 0.029 IN. THK	1
5	PADZZ	5365–01–459–5931	99193	1–070–125–03	SHIM, ACCESSORY DRIVE PINION LOCATION 0.030 – 0.034 IN. THK	1
5	PADZZ	5365–01–459–5930	99193	1–070–125–04	SHIM, ACCESSORY DRIVE PINION LOCATION 0.035 – 0.039 IN. THK	1
5	PADZZ	5365–01–459–5916	99193	1–070–125–05	SHIM, ACCESSORY DRIVE PINION LOCATION 0.040 – 0.044 IN. THK	1
5	PADZZ	5365–01–459–5920	99193	1–070–125–06	SHIM, ACCESSORY DRIVE PINION LOCATION 0.045 – 0.049 IN. THK	1
5	PADZZ	5365–01–459–5921	99193	1–070–125–07	SHIM, ACCESSORY DRIVE PINION LOCATION 0.050 – 0.052 IN. THK	1
6	PADZZ	3110–01–459–5545	99193	1-300-672-01	BEARING, BALL	1
7	PADZZ	3020–01–455–7341	91547	1–070–062–06	GEAR, SPUR	1
8	PADZZ	5340–01–430–0385	99193	1–070–066–03	RETAINER, NUT AND BO	1
9	PADZZ	5310–00–639–3586	96906	MS172237	NUT, PLAIN, ROUND	1
10	PADDD	3040–00–766–8627	91547	1–070–140–01	GEARSHAFT, BEVEL	1
11	PADZZ	5365–00–804–1507	96906	MS16625–3068	.RING, RETAINING	1
12	PADZZ	2840–00–656–8541	91547	1–070–011–01	.STOP, SHAFT, ACCESSOR	1
13	XADZZ		91547	1–070–101–01	.GEAR, DRIVEN, ACCESSO	1
14	PADZZ	5305–00–921–5408	91547	1–070–073–01	SCREW, CAP, SOCKET HE	2
15	PADZZ	2840–00–475–6980	91547	1–070–016–02	COVER, STRAINER RETA	1
16	PADZZ	5330–00–166–0980	81349	M83248/1–012	PACKING, PREFORMED	1
17	PADZZ	4730–00–658–7208	91547	1–070–021–01	STRAINER ELEMENT, SE	1
18	PADZZ	5365–00–445–6237	91547	1–070–002–01	SHIM	V
19	PADZZ	3110–01–459–5543	99193	1–300–658–01	BEARING, DUPLEX, THRUST	1
20	PADZZ	5310–00–754–3353	91547	1–070–006–01	WASHER, KEY	1
21	PADZZ	5310–00–660–3229	91547	1–070–007–01	NUT, PLAIN, ROUND	1
22	PADZZ	5306–00–831–4081	91547	STD3053–25	BOLT, MACHINE	3
23	PADDD	2840–01–460–6077	99193	1–070–210–07	CARRIER ASSEMBLY, ACCESSORY DRIVE SEE FIG. 44 FOR BREAKDOWN	1
24	PADZZ	3040–00–915–5952	91547	1–070–067–01	GEARSHAFT, SPUR	1
25	PADZZ	5315–00–916–2410	96906	MS9105–60	PIN, STRAIGHT, HEADLE	1
26	PADZZ	3110–01–258–7974	91547	2–300–941–01	BEARING, BALL, ANNULA	2
27	PADZZ	5365–00–947–3190	91547	1–070–059–01	SPACER, RING 0.160 – 0.164 IN. THK	V
27	PADZZ	5365–00–916–2433	91547	1–070–059–02	SPACER, RING 0.165 – 0.169 IN. THK	V
27	PADZZ	5365–00–916–2432	91547	1–070–059–03	SPACER, RING 0.170 – 0.174 IN. THK	V
27	PADZZ	5365–00–761–4179	99193	1–070–059–04	SPACER, SLEEVE 0.175 – 0.179 IN. THK	V
27	PADZZ	5365–00–916–2429	91547	1–070–059–05	SPACER, SLEEVE 0.180 – 0.184 IN. THK	V
28	PADZZ	3020–00–923–0561	91547	1–070–064–04	GEAR, BEVEL	1
29	PADZZ	5340–00–916–2591	91547	1–070–065–01	RETAINER, NUT AND BO	1
30	PADZZ	5310–00–680–5671	96906	MS172238	NUT, PLAIN, ROUND	1

END OF FIGURE

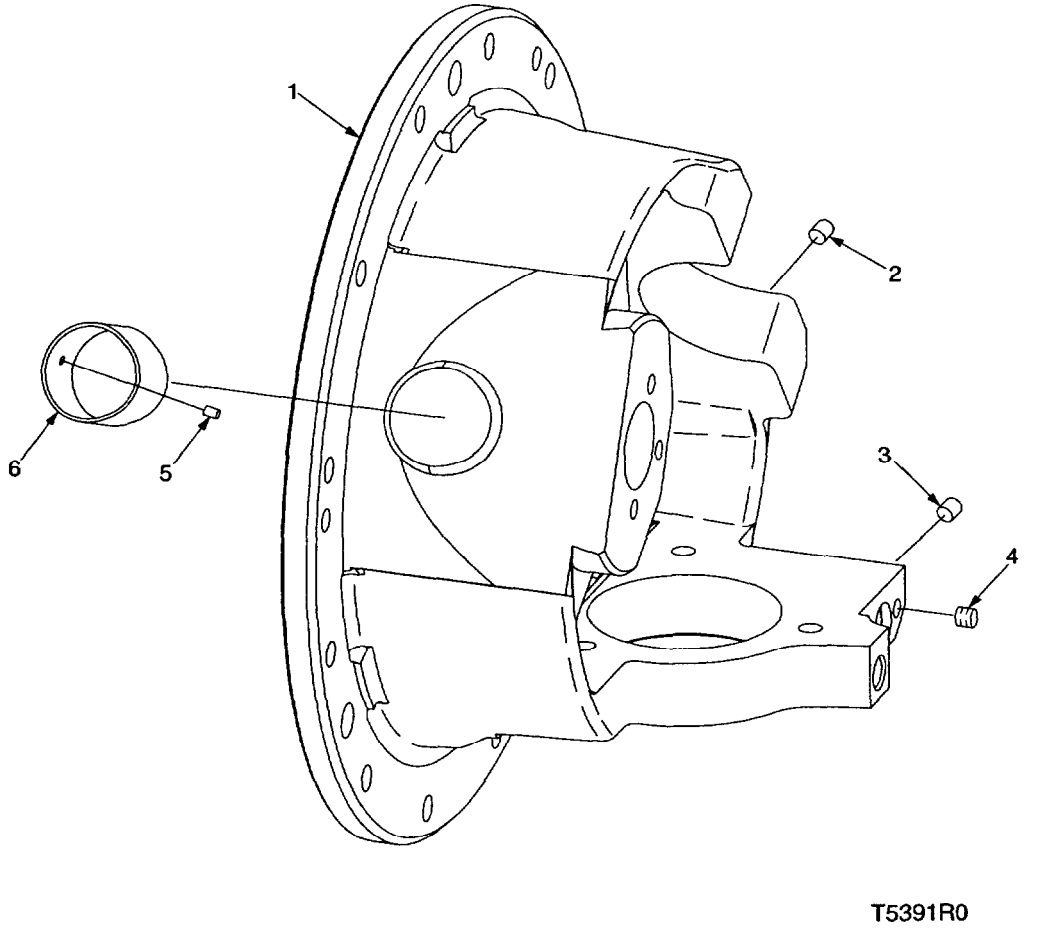

FIGURE 44. ACCESSORY DRIVE CARRIER ASSEMBLY (l-070-210-07)

(1) ITEM NO.	(2) SMR CODE	(3) NSN	(4) CAGEC	(5) PART NUMBER	(6) DESCRIPTION AND USABLE ON CODE (UOC)	(7) QTY
					GROUP 0405 ACCESSORY GEAR SECTION	
					FIG. 44 ACCESSORY DRIVE CARRIER ASSEMBLY (1–070–210–07)	
1	XADZZ		99193	1–070–104–06	CARRIER	1
2	PADZZ	5315–01–183–8845	96906	MS9105–77	PIN, STRAIGHT, HEADLE	1
3	PADZZ	5365–00–067–7398	91547	1–070–023–01	PLUG, MACHINE THREAD	1
4	PADZZ	5340–00–597–3302	96906	MS124695	INSERT, SCREW THREAD	2
5	PADZZ	5315–00–276–0112	88044	AN122683	PIN, STRAIGHT, HEA	2
6	PADZZ	3120–00–403–2873	91547	1–070–056–01	BUSHING, SLEEVE	1

END OF FIGURE

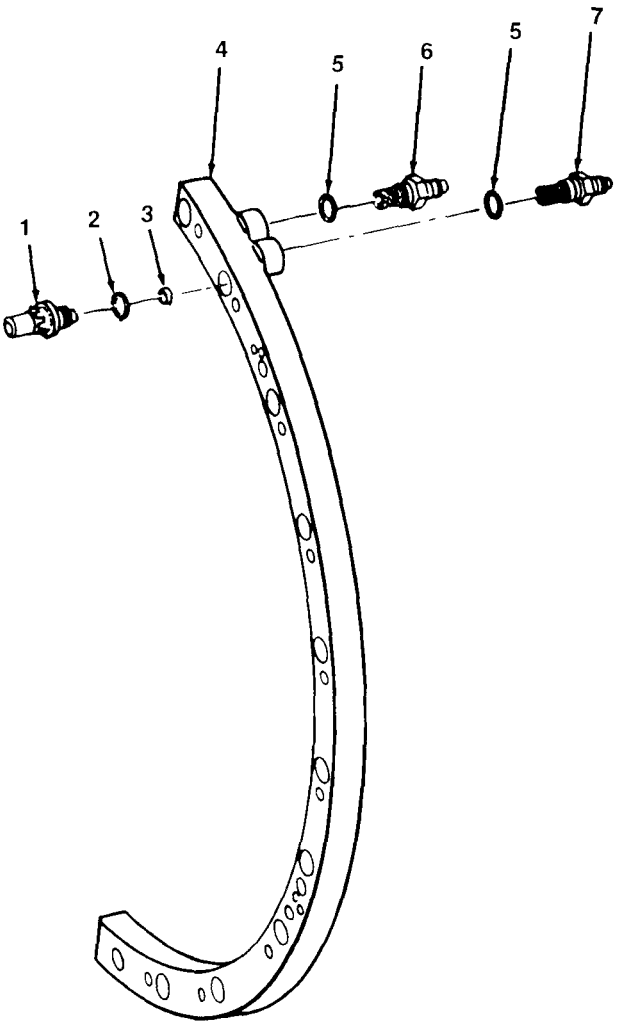

FIGURE 45. FUEL MANIFOLD ASSEMBLY

(1) ITEM NO	(2) SMR CODE	(3) NSN	(4) CAGEC	(5) PART NUMBER	(6) DESCRIPTION AND USABLE ON CODE (UOC)	(7) QTY
					GROUP 0406 FUEL SYSTEM	
					FIG. 45 FUEL MANIFOLD ASSEMBLY	
1	PADZZ	2915-00-944-7295	80254	1-300-347-03	NOZZLE,FUEL INJECTI	11
2	PADZZ	5330-01-129-3145	81349	M25988/4-904	PACKING,PREFORMED	11
3	PADZZ	5330-00-913-4103	91547	1-300-366-01	SEAL	11
4	PADZZ	2995-00-949-8219	91547	1-130-720-02	MANIFOLD,FLUID,AIRC	1
5	PADZZ	5330-00-828-8059	91547	1-300-371-01	PACKING,PREFORMED	4
6	PADZZ	2915-00-964-2273	91547	1-300-361-02	FILTER ASSEMBLY,REL	2
7	PADZZ	2915-00-959-6282	91547	1-300-362-02	FILTER ASSEMBLY,VAL	2
					END OF FIGURE	

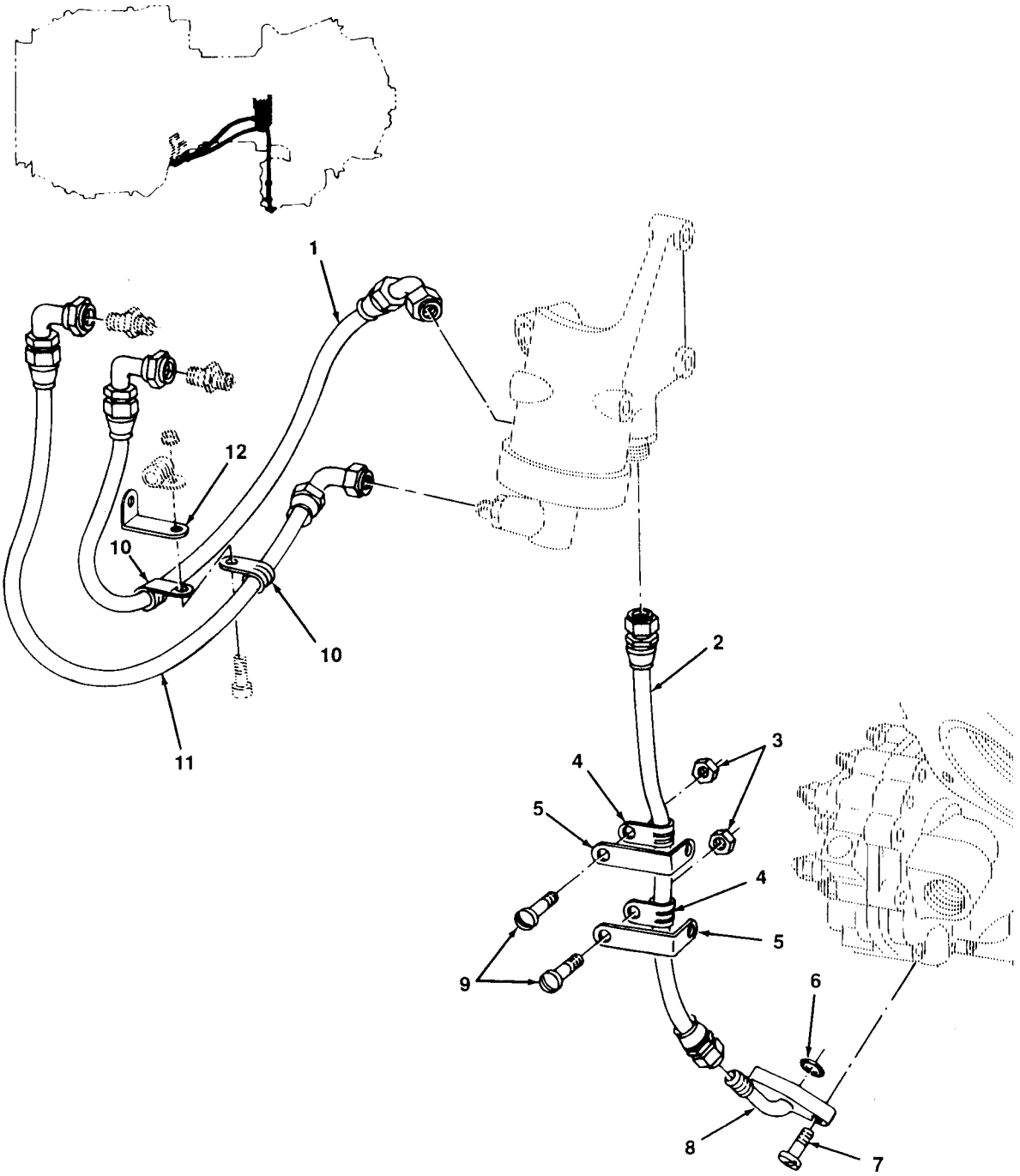

FIGURE 46. INLET GUIDE VANE ACTUATOR FUEL HOSE ASSEMBLIES AND RELATED PARTS

(1) ITEM NO	(2) SMR CODE	(3) NSN	(4) CAGEC	(5) PART NUMBER	(6) DESCRIPTION AND USABLE ON CODE (UOC)	(7) QTY
					GROUP 0406 FUEL SYSTEM	
					FIG. 46 INLET GUIDE VANE ACTUATOR FUEL HOSE ASSEMBLIES AND RELATED PARTS	
1	PAOZZ	4720-00-966-2233	91547	1-300-136-02	HOSE ASSEMBLY,NONME	1
2	PAOZZ	4720-00-966-2206	91547	1-300-144-01	HOSE ASSEMBLY,NONME	1
3	PAOZZ	5310-00-066-4289	96906	MS17826-3	NUT,SELF-LOCKING,SL	2
4	PAOZZ	5340-00-103-2945	96906	MS21919WCJ4	CLAMP,LOOP	2
5	PAOZZ	5340-00-911-9262	91547	1-160-625-01	BRACKET,ANGLE	2
6	PAOZZ	5330-00-166-0969	81349	M83248/1-010	PACKING,PREFORMED	1
7	PAOZZ	5305-00-055-2797	96906	MS24673-9	SCREW,CAP,SOCKET HE	2
8	PAOZZ	4730-00-904-9762	91547	1-160-626-01	ELBOW,FLANGE TO TUB	1
9	PAOZZ	5365-00-614-0246	96906	MS35266-63	SCREW,MACHINE	2
10	PAOZZ	5340-00-078-3619	96906	MS9349-05	CLAMP,LOOP	2
11	PAOZZ	4720-00-966-2240	91547	1-300-137-01	HOSE ASSEMBLY,NONME	1
12	PAOZZ	5340-00-983-6604	91547	1-160-306-01	BRACKET,ANGLE	1
					END OF FIGURE	

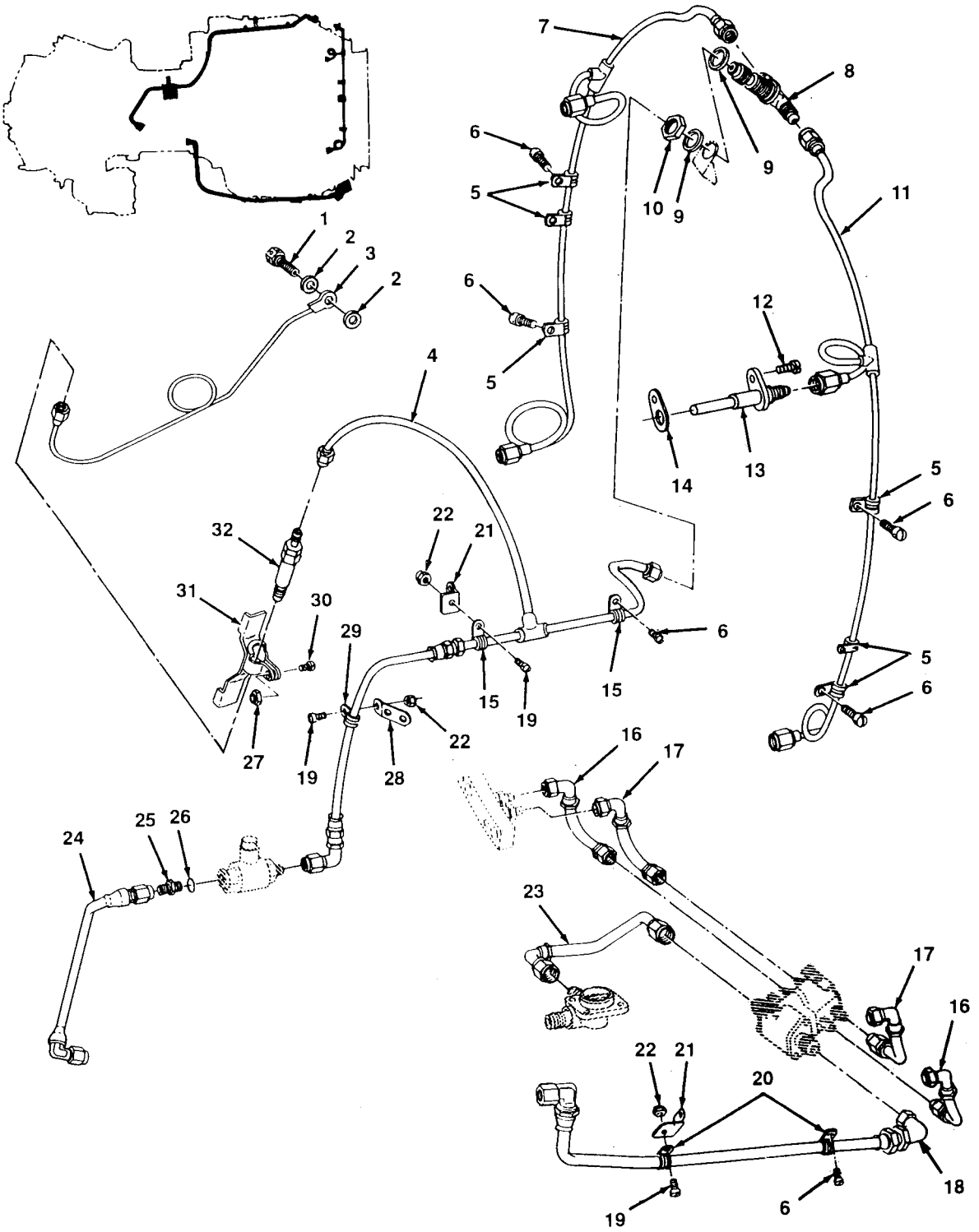

FIGURE 47. FUEL LINES, HOSES, NOZZLE, CHECK VALVE, AND RELATED PARTS

GROUP 0406 FUEL SYSTEM

FIG. 47 FUEL LINES, HOSES, NOZZLE, CHECK VALVE, AND RELATED PARTS

(1) ITEM NO.	(2) SMR CODE	(3) NSN	(4) CAGEC	(5) PART NUMBER	(6) DESCRIPTION AND USABLE ON CODE (UOC)	(7) QTY
1	PAOZZ	4730-00-007-2122	91547	1-130-260-01	BOLT, FLUID PASSAGE	1
2	PAOZZ	5330-00-235-0237	91547	STD3027C5	GASKET	2
3	PAOZZ	4710-00-134-0063	91547	1-170-500-01	TUBE ASSEMBLY, METAL	1
4	PAOZZ	2915-00-134-1114	91547	1-300-403-01	TUBE AND HOSE ASSY	1
5	PAOZZ	5340-00-579-1531	96906	MS21919WH2	CLAMP, LOOP	6
6	PAOZZ	5305-00-969-6487	96906	MS35266-59	SCREW, MACHINE	6
7	PAOZZ	4720-00-945-5900	91547	1-170-430-01	HOSE, NONMETALLIC	1
8	PAOZZ	4730-00-957-7583	91547	1-160-322-01	TEE, TUBE	1
9	PAOZZ	5310-00-167-0805	88044	AN960C716	WASHER, FLAT	2
10	PAOZZ	5310-00-079-1967	88044	AN924-4J	NUT, PLAIN, HEXAGON	1
11	PAOZZ	4730-00-945-5884	91547	1-170-420-01	MANIFOLD, FUELING	1
12	PAOZZ	5305-00-543-2753	96906	MS35266-61	SCREW, MACHINE	4
13	PAOZZ	2915-00-782-3819	91547	1-300-405-01	NOZZLE, FUEL, COMBUST	4
14	PAOZZ	5330-00-179-4207	91547	1-160-362-03	GASKET	4
15	PAOZZ	5340-00-103-2945	96906	MS21919WCJ4	CLAMP, LOOP	2
16	PAOZZ	4720-00-966-2204	91547	1-300-142	HOSE ASSEMBLY, NONME	2
17	PAOZZ	4720-00-910-3177	91547	1-300-141-01	HOSE ASSEMBLY, NONME	2
10	PAOZZ	4720-00-966-2205	91547	1-300-139-01	HOSE ASSEMBLY, NONME	1
19	PAOZZ	5365-00-614-0246	96906	MS35266-63	SCREW, MACHINE	3
20	PAOZZ	5340-00-420-1747	83930	11168-06	CLAMP, LOOP	2
21	PAOZZ	5340-00-656-8550	91547	1-160-136-01	BRACKET, CLAMP	2
22	PAOZZ	5310-00-066-4289	96906	MS17826-3	NUT, SELF-LOCKING, SL	3
23	PAOZZ	4720-00-966-2230	91547	1-300-143-01	HOSE ASSEMBLY, NONME	1
24	PAOZZ	4720-01-013-8142	91547	1-300-244-02	HOSE ASSEMBLY, NONME	1
25	PAOZZ	4730-00-684-6912	96906	MS24392J4	NIPPLE, TUBE	1
26	PAOZZ	5330-00-020-0203	81349	M83248/1-904	PACKING, PREFORMED	1
27	PAOZZ	5310-00-844-3302	96906	MS21043-3	NUT, SELF-LOCKING, EX	1
20	PAOZZ	5340-00-913-3871	91547	1-160-624-01	BRACKET, ANGLE	1
29	PAOZZ	5340-01-047-0632	96906	MS21122C5	CLAMP, LOOP	1
30	PAOZZ	5305-00-912-4818	96906	MS35276-261	SCREW, MACHINE	1
31	PAOZZ	5340-00-101-1669	91547	1-170-490-02	BRACKET AND CLAMP A	1
32	PAODD	4820-00-134-1113	91547	1-300-398-01	VALVE, CHECK SEE FIG. 40 FOR BREAKDOWN	1

END OF FIGURE

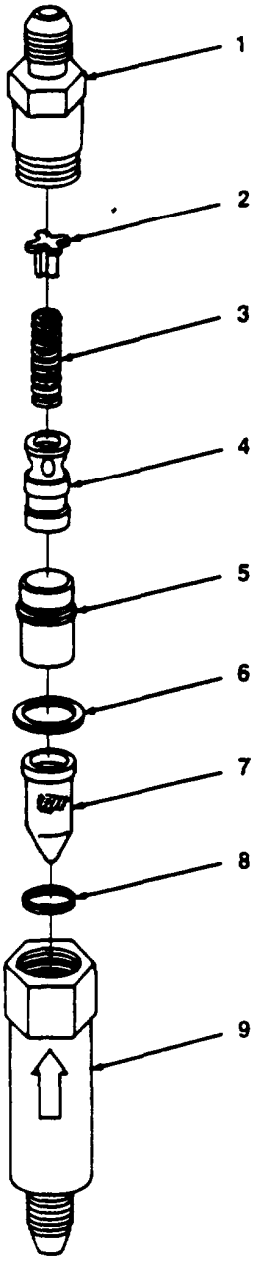

FIGURE 48. CHECK VALVE

(1) ILLUS. (a) FIG. NO.	(b) ITEM NO.	(2) SMR CODE	(3) NATIONAL STOCK NUMBER	(4) PART NUMBER	(5) FSCM	(6) DESCRIPTION USABLE ON CODE
					GROUP 0406 FUEL SYSTEM	
					FIG. 48 CHECK VALVE	
1	XADZZ		92003	2671180	CAP	1
2	XADZZ		92003	2642594	RETAINER,SPRING	1
3	XADZZ		92003	2671175	SPRING	1
4	XADZZ		92003	2671217	POPPET	1
5	XADZZ		92003	2671181	SEAT	1
6	PADZZ	5330-00-411-4436	92003	2671183	GASKET	1
7	PADZZ	4730-00-404-3377	92003	2671182	STRAINER ELEMENT,SE	1
8	XADZZ		92003	2672441	SPACER	1
9	XADZZ		92003	2671179	BODY	1
					END OF FIGURE	

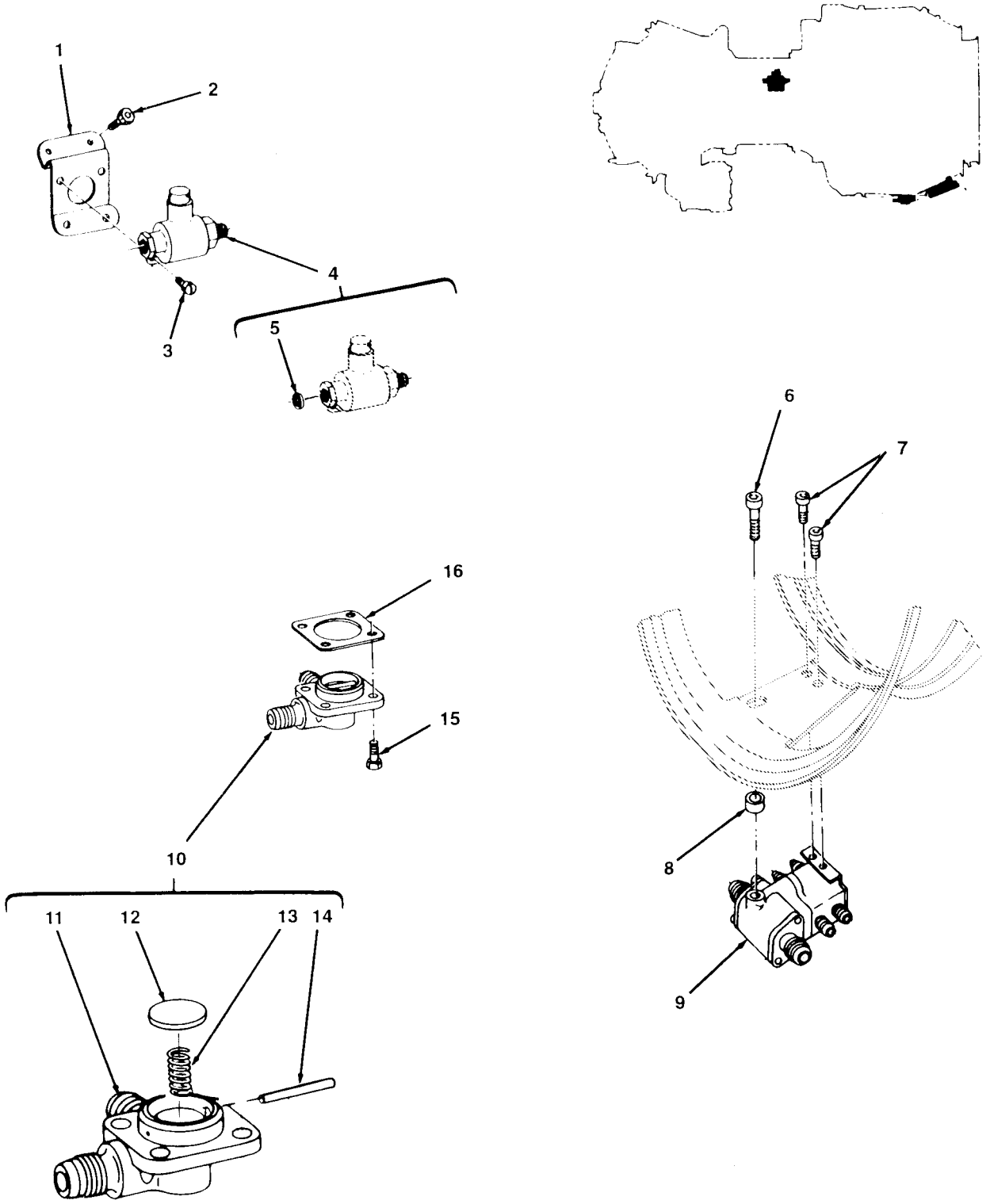

FIGURE 49. SOLENOID VALVE, COMBUSTION CHAMBER DRAIN VALVE, FLOW DIVIDER VALVE ASSEMBLY, AND RELATED PARTS

(1) ITEM NO	(2) SMR CODE	(3) NSN	(4) CAGEC	(5) PART NUMBER	(6) DESCRIPTION AND USABLE ON CODE (UOC)	(7) QTY
					GROUP 0406 FUEL SYSTEM	
					FIG. 49 SOLENOID VALVE,COMBUSTION CHAMBER DRAIN VALVE,FLOW DIVIDER VALVE ASSEMBLY,AND RELATED PARTS	
1	PAOZZ	5340-00-776-7095	91547	1-160-890-01	BRACKET,PRIMER VALV	1
2	PAOZZ	5306-00-340-4560	96906	MS9529-05	BOLT,MACHINE	4
3	PAOZZ	5365-00-614-0246	96906	MS35266-63	SCREW,MACHINE	2
4	PAOZZ	4810-00-087-7692	91547	1-300-191-05	VALVE,SOLENOID	1
5	PAOZZ	4730-00-072-4411	98568	T103-78	.STRAINER ELEMENT,SE	1
6	PAOZZ	5305-00-543-4517	96906	MS24673-2	SCREW,CAP,SOCKET HE	1
7	PAOZZ	5305-00-068-5398	96906	MS24673-1	SCREW,CAP,SOCKET HE	2
8	PAOZZ	5365-00-927-9541	91547	1-180-131-01	SPACER,SLEEVE	1
9	PAODD	2840-00-782-1771	91547	1-180-190-03	VALVE,LINEAR,DIRECT (VALVE ASSY, FLOW DIV) SEE FIG. 50 FOR BREAKDOWN	1
10	PAOOO	2915-00-924-3560	91547	1-160-220-03	VALVE,FUEL DRAIN ,COMBUSTION CHAM	1
11	XAOZZ		91547	1-160-124-03	.VALVE,BODY DRAIN	1
12	PAOZZ	2840-00-656-8548	91547	1-160-125-01	.PLATE,DRAIN VALVE,C	1
13	PAOZZ	5360-00-775-6513	91547	1-160-126-01	.SPRING,HELICAL,COMP	1
14	PAOZZ	5315-00-775-6553	91547	1-160-178-01	.PIN,STRAIGHT,HEA	2
15	PAOZZ	5306-00-080-9395	96906	MS9500-04	BOLT,MACHINE	4
16	PAOZZ	5330-00-654-8934	91547	1-160-045-01	GASKET	1
					END OF FIGURE	

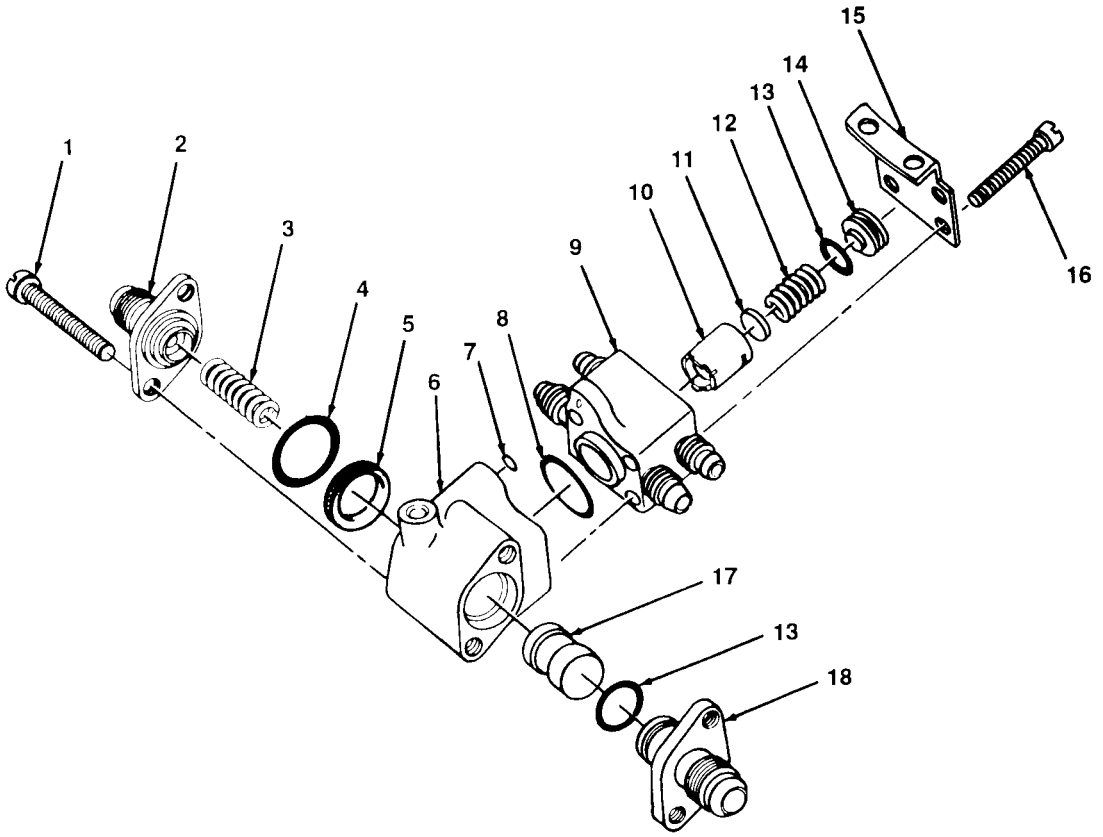

FIGURE 50. FLOW DIVIDER VALVE ASSEMBLY

(1) ITEM NO	(2) SMR CODE	(3) NSN	(4) CAGEC	(5) PART NUMBER	(6) DESCRIPTION AND USABLE ON CODE (UOC)	(7) QTY
					GROUP 0406 FUEL SYSTEM	
					FIG. 50 FLOW DIVIDER VALVE ASSEMBLY	
1	PADZZ	5305-00-271-5222	88044	AN502-10-26	SCREW,MACHINE	2
2	PADZZ	4730-00-803-5926	91547	1-180-122-03	ADAPTER,STRAIGHT,FL	1
3	PADZZ	5360-00-945-0210	91547	1-180-126-01	SPRING,HELICAL,COMP	1
4	PADZZ	5330-00-166-0992	81349	M83248/1-016	PACKING,PREFORMED	1
5	PADZZ	5330-00-781-0992	91547	1-300-167-01	PACKING WITH RETAIN	1
6	PADZZ	2840-00-925-2971	91547	1-180-115-01	HOUSING,FLOW DIVIDE	1
7	PADZZ	5330-00-252-6048	96906	MS29513-006	PACKING,PREFORMED	1
8	PADZZ	5330-00-248-3842	96906	MS29513-017	PACKING,PREFORMED	1
9	PADZZ	2840-00-944-4901	91547	1-180-170-01	HOUSING,VALVE,DIREC	1
10	PADZZ	2840-00-924-3630	91547	1-180-180-01	PLUNGER ASSEMBLY,IN	1
11	PADZZ	5365-00-945-3910	91547	1-180-128-01	SHIM	V
12	PADZZ	5360-00-945-5598	91547	1-180-127-02	SPRING,HELICAL,COMP	1
13	PADZZ	5330-00-248-3840	96906	MS29513-014	PACKING,PREFORMED	2
14	PADZZ	2840-00-954-4278	91547	1-180-119-03	CAP,SPRING RETAINER	1
15	PADZZ	2840-00-924-3617	91547	1-180-200-01	BRACKET ASSY,COVER	1
16	PADZZ	5305-00-934-0058	91547	1-180-134-01	SCREW,MACHINE	4
17	PADZZ	2840-00-924-3627	91547	1-180-125-01	PLUNGER,DUMP VALVE	1
18	PADZZ	2840-00-924-7697	91547	1-180-121-01	ADAPTER MANIFOLD FU	1
					END OF FIGURE	

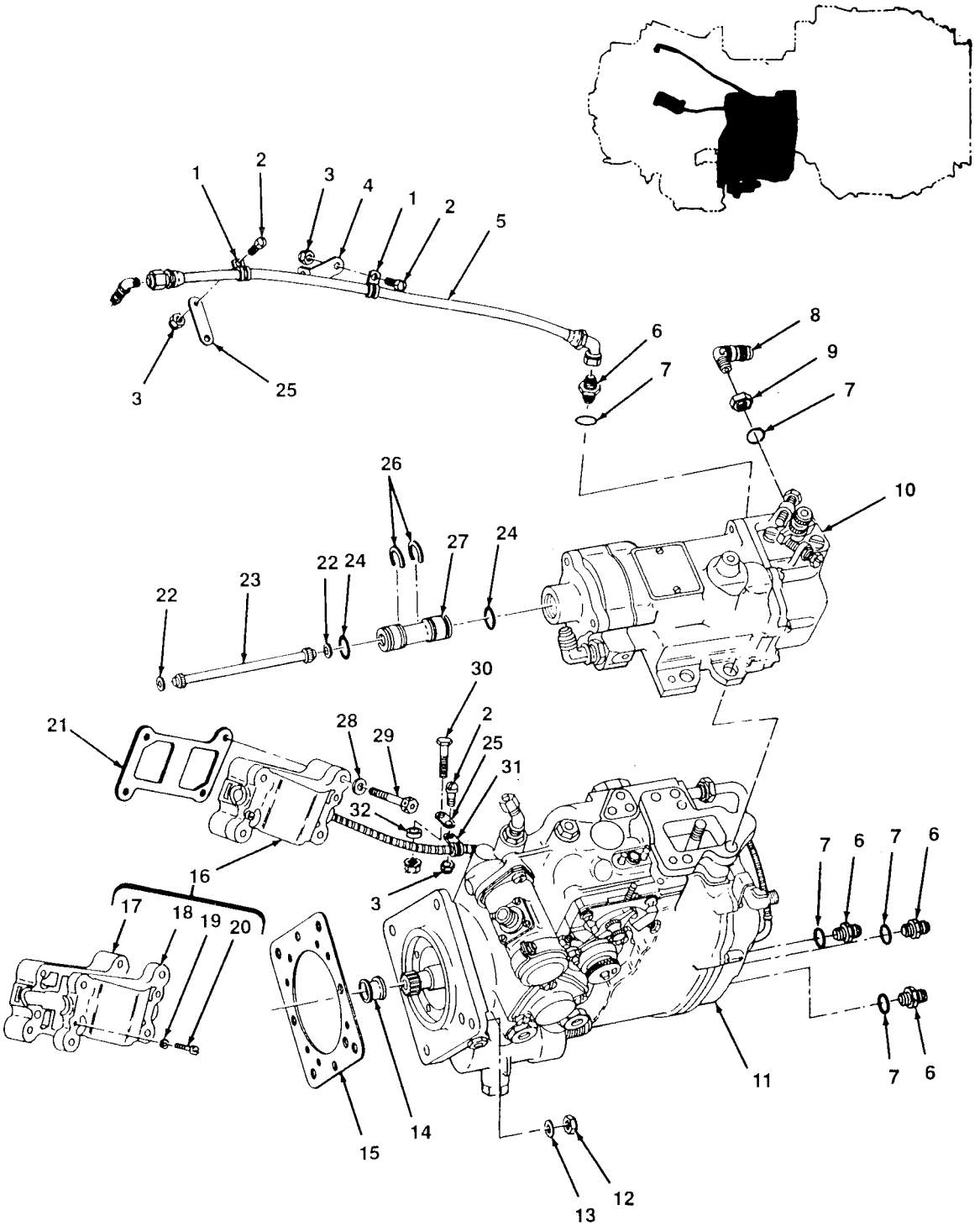

FIGURE 51. MAIN FUEL CONTROL, OVERSPEED GOVERNOR, AND RELATED PARTS

(1) ITEM NO.	(2) SMR CODE	(3) NSN	(4) CAGEC	(5) PART NUMBER	(6) DESCRIPTION AND USABLE ON CODE (UOC)	(7) QTY
					GROUP 0406 FUEL SYSTEM	
					FIG. 51 MAIN FUEL CONTROL,OVERSPEED GOVERNOR,AND RELATED PARTS	
1	PAOZZ	5340-01-047-0632	96906	MS21122C5	CLAMP,LOOP	2
2	PAOZZ	5365-00-614-0246	96906	MS35266-63	SCREW,MACHINE	3
3	PAOZZ	5310-00-066-4289	96906	MS17826-3	NUT,SELF-LOCKING,SL	3
4	PAOZZ	5340-00-775-6514	91547	1-160-468-01	BRACKET,ANGLE	1
5	PAOZZ	4720-00-966-2239	91547	1-300-135-01	HOSE ASSEMBLY,NONME	1
6	PAOZZ	4730-00-684-6912	96906	MS24392J4	NIPPLE,TUBE	4
7	PAOZZ	5330-00-020-0203	81349	M83248/1-904	PACKING,PREFORMED	5
8	PAOZZ	4730-00-722-7214	96906	MS24394J4	ELBOW,TUBE	1
9	PAOZZ	5310-00-079-1967	88044	AN924-4J	NUT,PLAIN,HEXAGON	1
10	PAODD	2915-01-005-9196	91547	1-160-850-16	GOVERNOR,OVERSPEED SEE FIG. 52 FOR PARTIAL BREAKDOWN,SEE DMWR55-2915-331 FOR COMPLETE BREAKDOWN	1
10	XDODD		11599	103100-A2	GOVERNOR,OVERSPEED SEE FIG. 52 FOR PARTIAL BREAKDOWN,SEE DMWR55-2915-331 FOR COMPLETE BREAKDOWN	1
11	XBODD		11599	100770A4	FUEL CONTROL,MAIN,T SEE FIG. 53 AND 54 FOR PARTIAL BREAKDOWN,SEE DMWR55-2915-335 FOR COMPLETE BREAKDOWN	1
11	PAODD	2915-01-216-9779	11599	106500A1	FUEL CONTROL,MAIN,T SEE FIG. 53 AND 54 FOR PARTIAL BREAKDOWN,SEE DMWR55-2915-335 FOR COMPLETE BREAKDOWN	1
11	XDODD		11599	106500A2	FUEL CONTROL,MAIN,T SEE FIG. 53 AND 54 FOR PARTIAL BREAKDOWN,SEE DMWR55-2915-335 FOR COMPLETE BREAKDOWN	1
12	PAOZZ	5310-00-807-1469	96906	MS21042-5	NUT,SELF-LOCKING,EX	4
13	PAOZZ	5310-00-167-0836	88044	AN960-516L	WASHER,FLAT	4
14	PAOZZ	5330-00-570-9811	91547	1-300-368-01	SEAL,TUBING,ENGINE	1
15	PAOZZ	5330-01-330-9629	91547	1-080-025-02	GASKET	1
16	PAOZZ	2840-00-994-4302	91547	1-160-040-03	HOUSING ASSY,TEMPER	1
17	XAOZZ		91547	1-170-120-01	.HOUSING,LOWER TEMPE	1
18	XAOZZ		91547	1-160-446-03	.HOUSING,UPPER TEMPE	1
19	PAOZZ	5310-00-685-3744	88044	AN960C8	.WASHER,FLAT	2
20	PAOZZ	5305-00-622-9476	96906	MS35265-46	.SCREW,MACHINE	2
21	PAOZZ	5330-00-775-6523	91547	1-160-454-01	GASKET	1
22	PAOZZ	5310-00-981-5970	91547	1-160-589-02	NUT,GOVERNOR SHAFT	2
23	PAOZZ	2840-00-775-6517	91547	1-160-444-01	SHAFT,OVERSPEED GOV	1
24	PAOZZ	5330-00-166-1062	81349	M83248/1-113	PACKING,PREFORMED	2
25	PAOZZ	2840-00-979-3741	91547	1-160-309-01	PLATE,MOUNTING STRA	2
26	PAOZZ	5365-00-777-8163	91547	STD3033C15	RING,RETAINING	2
27	PAOZZ	2840-00-775-6525	91547	1-160-464-01	TUBE,GOVERNOR SHAFT	1
28	PAOZZ	5310-00-167-0834	88044	AN960-10L	WASHER,FLAT	4
29	PAOZZ	5306-01-009-7107	96906	MS9565-20	BOLT,MACHINE	4
30	PAOZZ	5306-00-177-5571	96906	MS9519-20	BOLT,MACHINE	1
31	PAOZZ	5340-00-664-3092	96906	MS9024-03	CLAMP,LOOP	1
32	PAOZZ	5365-00-064-9434	91547	1-160-607-01	SPACER,SLEEVE	1

END OF FIGURE

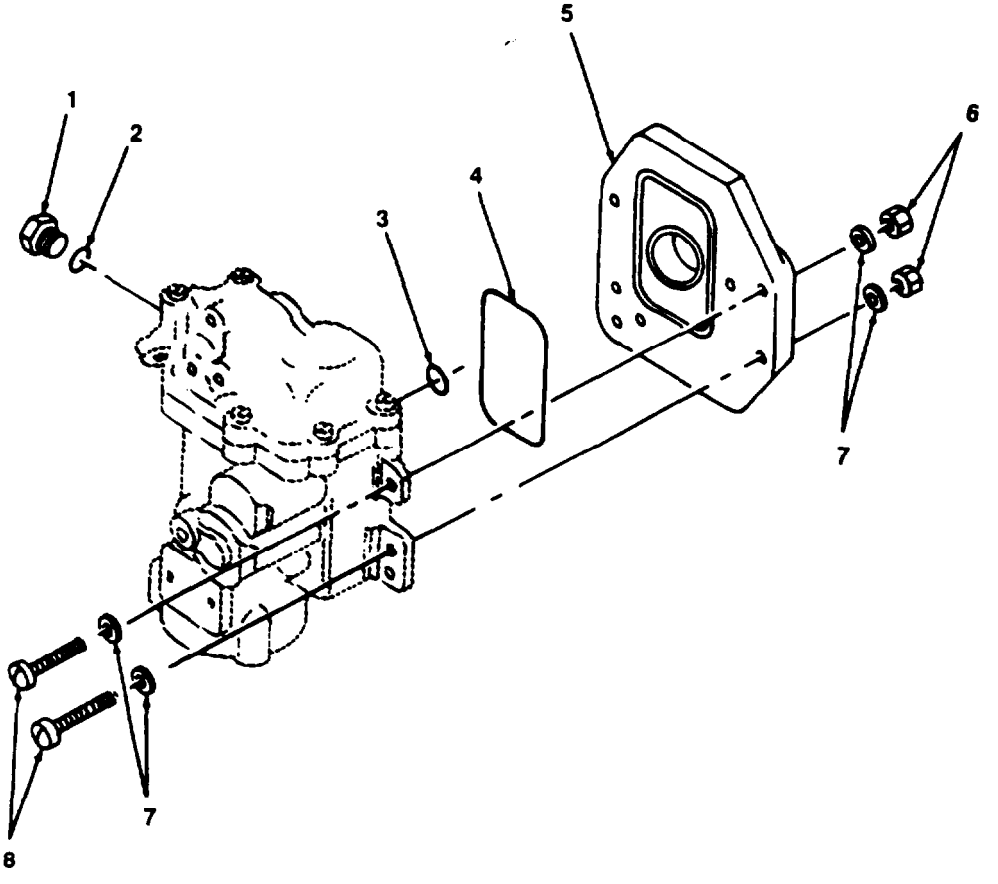

FIGURE 52. OVERSPEED GOVERNOR AND SHIPPING PARTS

(1) ITEM NO	(2) SMR CODE	(3) NSN	(4) CAGEC	(5) PART NUMBER	(6) DESCRIPTION AND USABLE ON CODE (UOC)	(7) QTY
					GROUP 0406 FUEL SYSTEM	
					FIG. 52 OVERSPEED GOVERNOR AND SHIPPING PARTS	
1	PAOZZ	5365-00-966-8258	11599	28985-4	PLUG,MACHINE THREAD	1
2	PAOZZ	5330-00-020-0203	81349	M83248-1-904	PACKING,PREFORMED	1
3	PAOZZ	5330-00-248-3835	96906	MS29513-010	PACKING,PREFORMED	1
4	PAOZZ	5330-00-802-1360	96906	MS9021-034	PACKING,PREFORMED	1
5	PAOZZ	2915-00-842-0152	11599	77382	COVER,SHIPPING,MAIN	1
6	PAOZZ	5310-00-761-6882	96906	MS51967-2	NUT,PLAIN,HEXAGON USED FOR SHIPPING ONLY	2
7	PAOZZ	5310-00-515-7449	88044	AN960C416L	WASHER,FLAT USED FOR SHIPPING ONLY	4
8	PAOZZ	5305-00-844-5825	96906	MS35265-84	SCREW,MACHINE USED FOR SHIPPING ONLY	2
					END OF FIGURE	

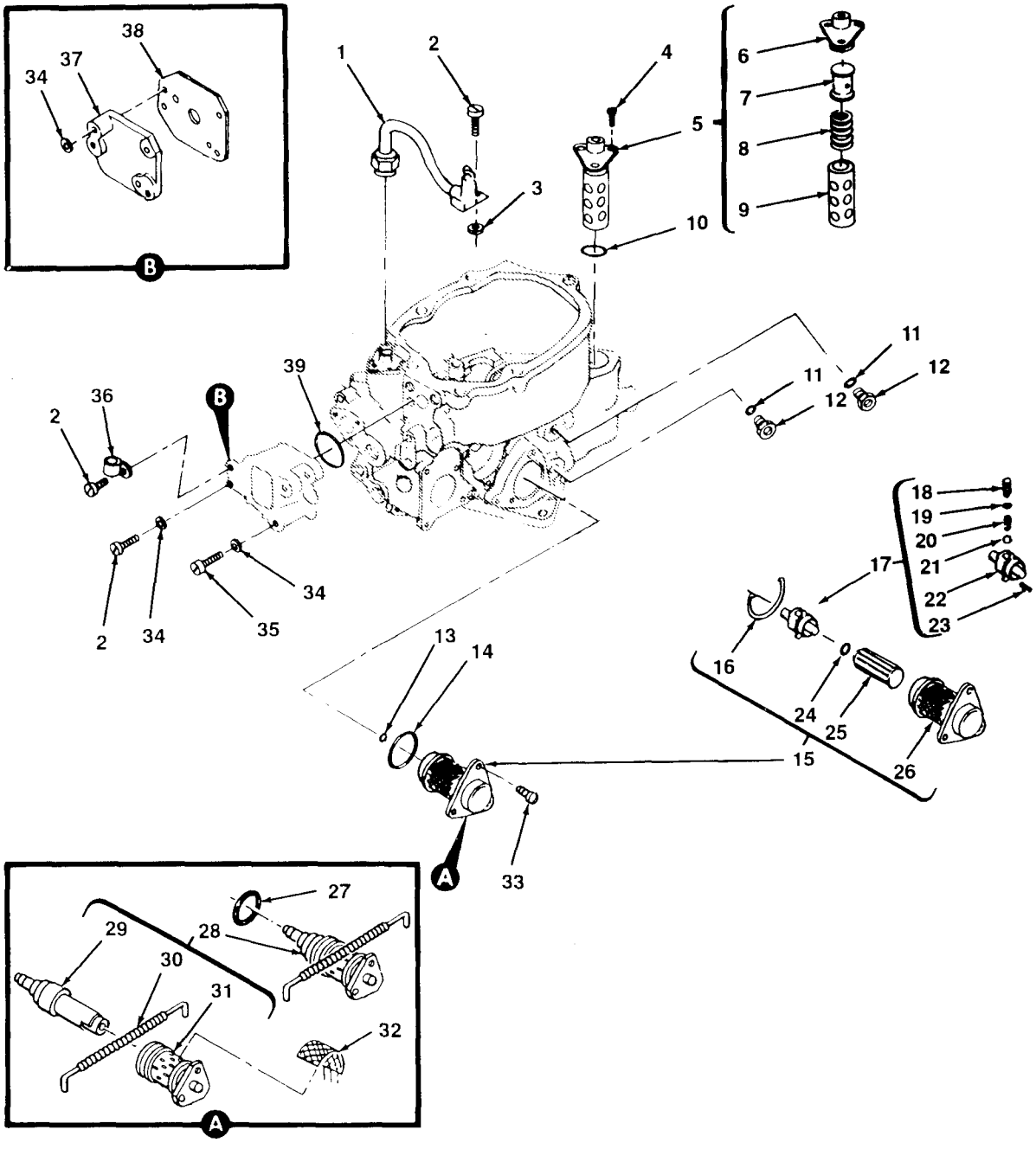

FIGURE 53. FUEL HOUSING ASSEMBLY STRAINER, PRESSURE FLUID FILTER, BYPASS HOUSING, AND FILTER BODY

(1)	(2)	(3)	(4)	(5)	(6)	(7)
ITEM NO	SMR CODE	NSN	CAGEC	PART NUMBER	DESCRIPTION AND USABLE ON CODE (UOC)	QTY
					GROUP 0406 FUEL SYSTEM	
					FIG. 53 FUEL HOUSING ASSEMBLY STRAINER,PRESSURE FLUID FILTER,BYPASS HOUSING,AND FILTER BODY	
1	PAOZZ	4710-00-953-4991	11599	76672	TUBE ASSEMBLY,METAL	1
2	PAOZZ	5305-00-939-9147	96906	MS35275-281	SCREW,MACHINE	3
3	PAOZZ	5310-00-531-9515	88044	AN960C416	WASHER,FLAT	1
4	PAOZZ	5305-00-939-9188	96906	MS35275-263	SCREW,MACHINE	3
5	AFFFF		11599	79165	STRAINER,SEDIMENT	1
6	PAOZZ	2915-00-075-1185	11599	79288	.FITTING ASSEMBLY	1
7	PAOZZ	1650-00-075-1182	11599	77970	.FILTER ELEMENT,FLUI	1
8	PAOZZ	5360-00-075-1183	11599	79296	.SPRING,HELICAL,COMP	1
9	PAOZZ	2915-00-075-1184	11599	79293	.RETAINER ASSEMBLY,F	1
10	PAOZZ	5330-00-250-0236	96906	MS29513-024	PACKING,PREFORMED	1
11	PAOZZ	5330-00-263-8011	96906	MS29512-03	PACKING,PREFORMED	2
12	PAOZZ	5365-00-618-7050	11599	43725	PLUG,MACHINE THREAD	2
13	PAOZZ	5330-00-248-3835	96906	MS29513-010	PACKING,PREFORMED	1
14	PAOZZ	5330-00-265-1088	96906	MS29513-027	PACKING,PREFORMED	1
15	ADODD		11599	76721	FILTER,FLUID,PRESS	1
16	PAOZZ	5365-00-796-4306	11599	46286	.RING,RETAINING	1
17	PADZZ	2915-00-992-1146	11599	76722	.HOUSING ASSEMBLY,BY	1
18	PADZZ	5340-00-707-6891	11599	46270	..RETAINER,VALVE	1
19	PADZZ	5330-00-248-3833	96906	MS29513-008	..PACKING,PREFORMED	1
20	PADZZ	5360-00-987-9936	11599	75804	..SPRING,HELICAL,COMP	1
21	PADZZ	3110-00-989-7002	11599	28970-6	..BALL,BEARING	1
22	PAOZZ	2915-00-600-6618	11599	46271	..HOUSING,VALVE	1
23	PADZZ	5315-01-110-2531	96906	MS16562-194	..PIN,SPRING	1
24	PAOZZ	5330-00-248-3836	96906	MS29513-012	.PACKING,PREFORMED	1
25	PAOZZ	1650-00-796-7083	11599	28876	.FILTER ELEMENT,FLUI	1
26	PAOZZ	2915-00-796-4308	11599	48662	.COVER ASSEMBLY,STRA	1
27	PAOZZ	5330-00-003-9157	02697	2-026-N602-70	PACKING,PREFORMED USED WITH P/N 85938 ONLY	1
28	PAODD	1650-00-828-8166	11599	85938	FILTER BODY,FLUID ALTERNATE TO P/N 76721	1
29	PAOZZ	2915-00-828-8167	11599	86239	.FILTER ASSEMBLY,SER	1
30	PAOZZ	2915-00-834-1550	11599	86529	.RETAINER,FLEXIBLE R	1
31	PAOZZ	2915-00-833-1665	11599	86528	.STRAINER ASSY,FUEL	1
32	PAOZZ	4730-00-106-0091	11599	90488	STRAINER ELEMENT,SE USED WITH P/N 85938 ONLY	1
33	PAOZZ	5305-00-150-9269	88044	AN503-416-8	SCRW,MACHINE	3
34	PAOZZ	5310-00-515-7449	88044	AN960C416L	WASHER,FLAT	4
35	PAOZZ	5305-00-939-9172	96906	MS35275-287	SCREW,MACHINE	2
36	PAOZZ	5340-00-796-4341	81996	5340A01-003	CLAMP,LOOP	1
37	PAOZZ	2995-00-937-3142	11599	77381	COVER,SHIPPING	1
38	PAOZZ	5330-00-937-5959	11599	86014	GASKET,SHIPPING	1
39	PAOZZ	5330-00-265-1088	96906	MS29513-027	PACKING,PREFORMED	1
					END OF FIGURE	

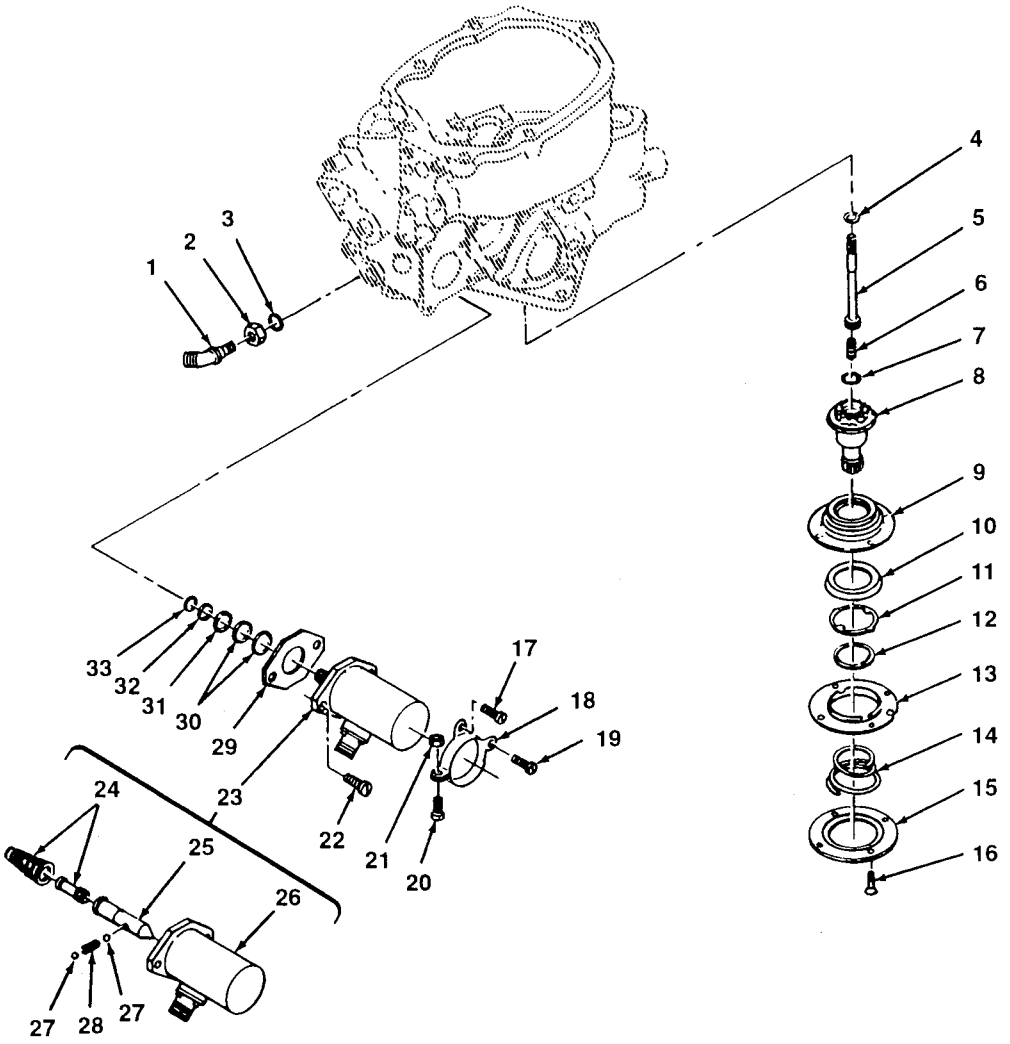

FIGURE 54. FUEL HOUSING ASSEMBLY SEAL ASSEMBLY AND SOLENOID VALVE

(1)	(2)	(3)	(4)	(5)	(6)	(7)
ITEM NO	SMR CODE	NSN	CAGEC	PART NUMBER	DESCRIPTION AND USABLE ON CODE (UOC)	QTY
					GROUP 0406 FUEL SYSTEM	
					FIG. 54 FUEL HOUSING ASSEMBLY SEAL ASSEMBLY AND SOLENOID VALVE	
1	PAOZZ	4730-00-803-5049	96906	MS24396D4	ELBOW,TUBE	1
2	PAOZZ	5310-00-969-6019	11599	78405	NUT,PLAIN,HEXAGON	1
3	PAOZZ	5330-00-263-8028	96906	MS29512-04	PACKING,PREFORMED	1
4	PAOZZ	5365-00-701-7321	11599	75242	SHIM	V
5	PAOZZ	3040-00-671-5375	11599	76081	SHAFT,SHOULDERED	1
6	PAOZZ	5360-00-796-7092	11599	43825	SPRING,HELICAL,COMP	1
7	PAOZZ	5330-00-248-3837	96906	MS29513-110	PACKING,PREFORMED	1
8	PAOZZ	2915-01-018-3827	11599	91620	SHAFT AND RING,FUEL	1
9	PAOZZ	2915-00-953-4965	11599	75157	SEAL ASSEMBLY	1
10	PAOZZ	5365-00-992-1150	11599	75154	RING,DIAPHRAGM RETA	1
11	PAOZZ	5310-00-560-3173	11599	23932	WASHER,KEY	1
12	PAOZZ	5310-00-550-4271	11599	23939	WASHER,FLAT	1
13	PAOZZ	2915-00-992-1165	11599	75151	PLATE,SEAL	1
14	PAOZZ	5360-00-693-1694	11599	24150	SPRING,HELICAL,COMP	1
15	PAOZZ	3040-00-618-5828	11599	43607	PLATE,RETAINING,SHA	1
16	PAOZZ	5305-00-701-5075	96906	MS51959-64	SCREW,MACHINE	4
17	PAOZZ	5305-00-939-9189	96906	MS35275-264	SCREW,MACHINE	1
18	PAOZZ	5340-00-600-0726	11599	70791	BRACKET,SOLENOID SU	1
19	PAOZZ	5305-00-939-9188	96906	MS35275-263	SCREW,MACHINE	1
20	PAOZZ	5305-00-543-2753	96906	MS35266-61	SCREW,MACHINE	1
21	PAOZZ	5310-00-639-7537	88044	AN360-3	NUT,PLAIN,HEXAGON	1
22	PAOZZ	5305-00-842-1938	11599	70946	SCREW,MACHINE	2
23	PAOFF	2915-00-056-2349	11599	79246	SOLENOID AND VALVE	1
24	PAOZZ	4820-00-987-0421	11599	74874	.SELECTOR SET,DIRECT	1
25	PAOZZ	2915-00-977-1051	11599	74979	.INSERT,SOLENOID VAL	1
26	PAOZZ	5945-00-072-1060	11599	79247	.SOLENOID,ELECTRICAL	1
27	PAOZZ	3110-00-183-7537	96906	MS19060-4806	.BALL,BEARING	2
28	PAOZZ	5360-00-075-1187	11599	78989	.SPRING,HELICAL,COMP	1
29	PAOZZ	5365-00-796-4314	11599	70970	SHIM	V
30	PAOZZ	5330-00-166-0992	81349	M83248/1-016	PACKING,PREFORMED	2
31	PAOZZ	5330-00-248-3843	96906	MS29513-015	PACKING,PREFORMED	1
32	PAOZZ	5330-00-248-3840	96906	MS29513-014	PACKING,PREFORMED	1
33	PAOZZ	5330-00-248-3838	96906	MS29513-013	PACKING,PREFORMED	1
					END OF FIGURE	

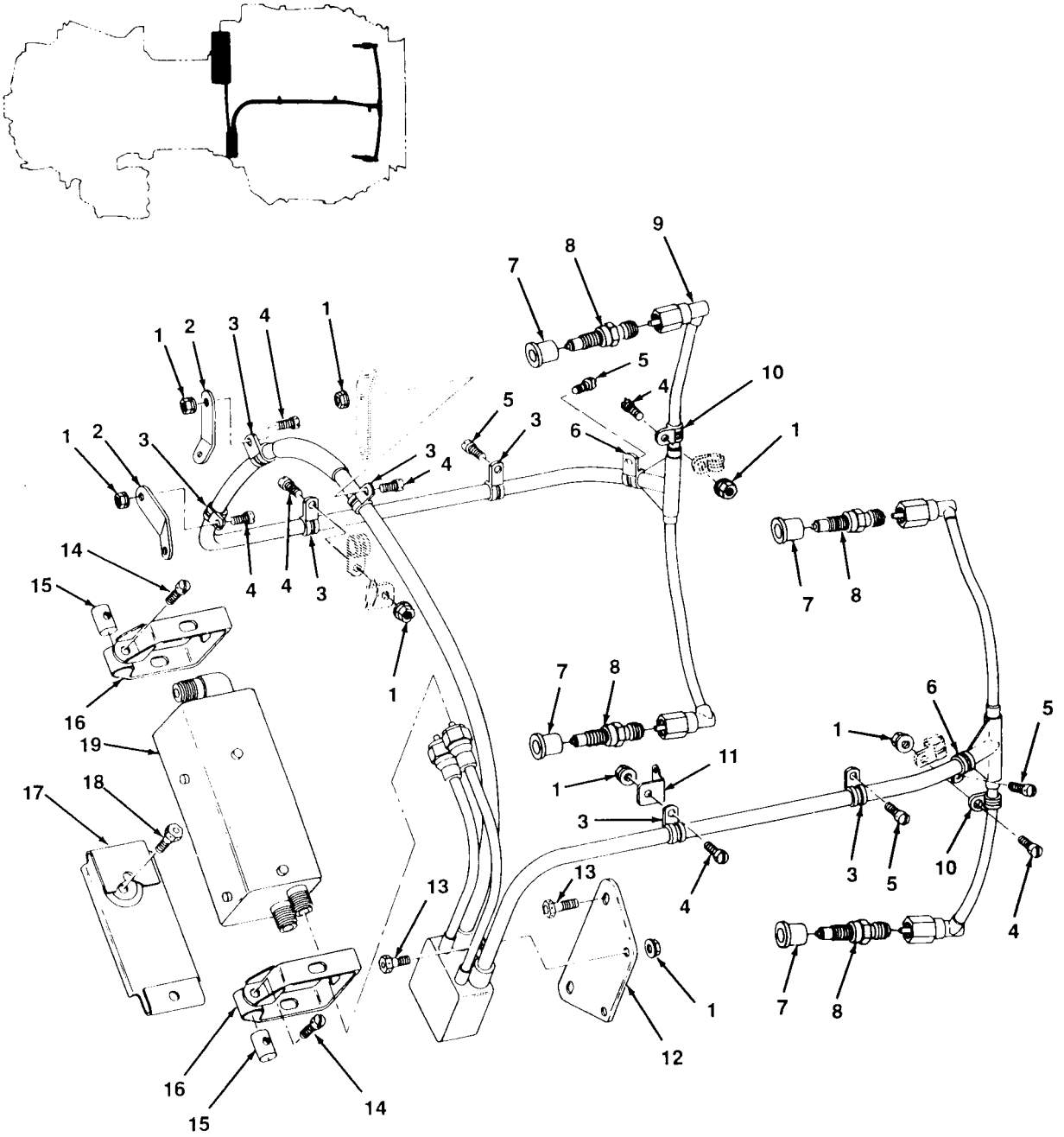

FIGURE 55. SPECIAL CABLE ASSEMBLY, IGNITION EXCITER, SPARK IGNITERS, AND RELATED PARTS

(1) ITEM NO	(2) SMR CODE	(3) NSN	(4) CAGEC	(5) PART NUMBER	(6) DESCRIPTION AND USABLE ON CODE (UOC)	(7) QTY
					GROUP 0407 ELECTRICAL SYSTEM	
					FIG. 55 SPECIAL CABLE ASSEMBLY, IGNITION EXCITER,SPARK IGNITERS,AND RELATED PARTS	
1	PAOZZ	5310-00-066-4289	96906	MS17826-3	NUT,SELF-LOCKING,SL	9
2	PAOZZ	5340-00-911-9255	91547	1-160-623-01	BRACKET,ANGLE	2
3	PAOZZ	5340-00-420-1747	83930	11168-06	CLAMP,LOOP	7
4	PAOZZ	5365-00-614-0246	96906	MS35266-63	SCREW,MACHINE	7
5	PAOZZ	5305-00-969-6487	96906	MS35266-59	SCREW,MACHINE	4
6	PAOZZ	5340-00-177-4116	80205	NAS1715C8T	CLAMP,LOOP	2
7	PAOZZ	5365-00-928-2008	91547	1-150-126-01	SPACER,SLEEVE	4
8	PAOZZ	2925-00-957-9947	91547	1-300-348-01	IGNITER,SPARK,GAS T	4
9	PAOFF	5995-00-943-2422	91547	1-300-124-01	CABLE ASSEMBLY,SPEC SEE FIG. 56 FOR BREAKDOWN	1
10	PAOZZ	5340-01-047-0632	96906	MS21122C5	CLAMP,LOOP	2
11	PAOZZ	5340-00-656-8550	91547	1-160-136-01	BRACKET,CLAMP	1
12	PAOZZ	5340-00-957-2392	91547	1-160-622-01	BRACKET,IGNITION MO	1
13	PAOZZ	5306-00-340-4560	96906	MS9529-05	BOLT,MACHINE	4
14	PAOZZ	5305-00-622-9486	96906	MS35266-68	SCREW,MACHINE	2
15	PAOZZ	5310-00-788-7493	91547	1-160-258-02	NUT,PLAIN,BARREL	2
16	PAOZZ	2840-00-776-7093	91547	1-160-870-02	CLAMP ASSEMBLY,LOOP	2
17	PAOZZ	2840-00-957-2389	91547	1-160-509-03	BRACKET,IGNITION UN	1
18	PAOZZ	5306-00-082-0857	96906	MS9529-04	BOLT,MACHINE	1
19	PAOZZ	2925-00-950-2516	91547	1-300-363-01	EXCITER,IGNITION	1
					END OF FIGURE	

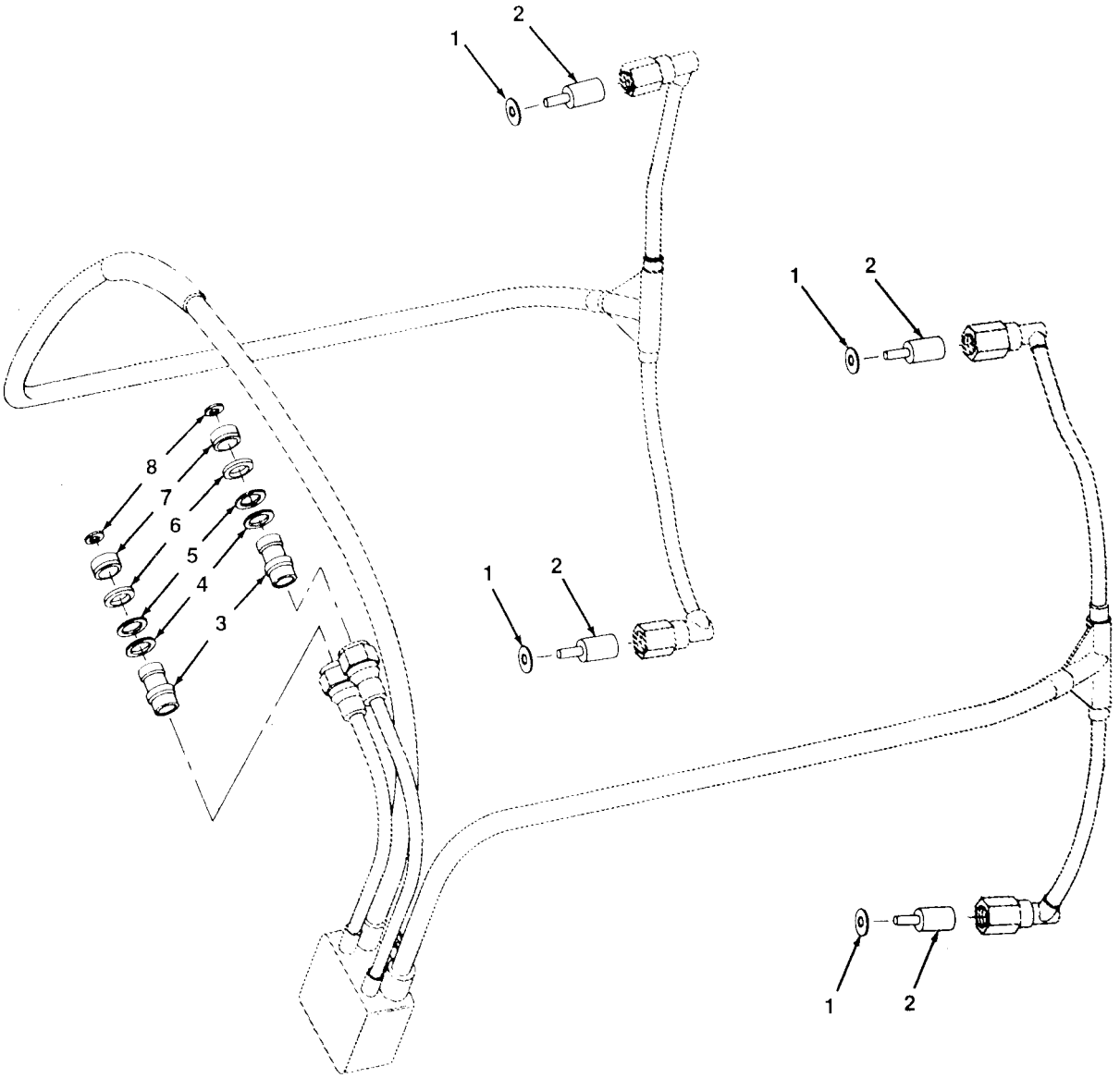

FIGURE 56. SPECIAL CABLE ASSEMBLY

(1) ITEM NO	(2) SMR CODE	(3) NSN	(4) CAGEC	(5) PART NUMBER	(6) DESCRIPTION AND USABLE ON CODE (UOC)	(7) QTY
					GROUP 0407 ELECTRICAL SYSTEM	
					FIG. 56 SPECIAL CABLE ASSEMBLY	
1	PAFZZ	5365-00-720-9221	79136	N5000-43H	RING,RETAINING	4
2	XDFZZ		77820	10-319253	INSULATOR,BUSHING	4
3	PAFZZ	2925-00-875-2095	77820	10-166723-3	SLEEVE,LEAD,IGNITER	2
4	XDFZZ		82577	163339	WASHER,FLAT	2
5	PAFZZ	5310-00-021-9105	59501	10-166724-6	WASHER,SPRING TENSI	2
6	PAFZZ	5365-00-475-5441	59501	10-166716	SPACER,SLEEVE	2
7	PAFZZ	5330-00-486-8080	59501	10-166711	PACKING,PREFORMED	2
8	PAFZZ	5365-00-486-8077	77820	10-166519	RING	2
					END OF FIGURE	

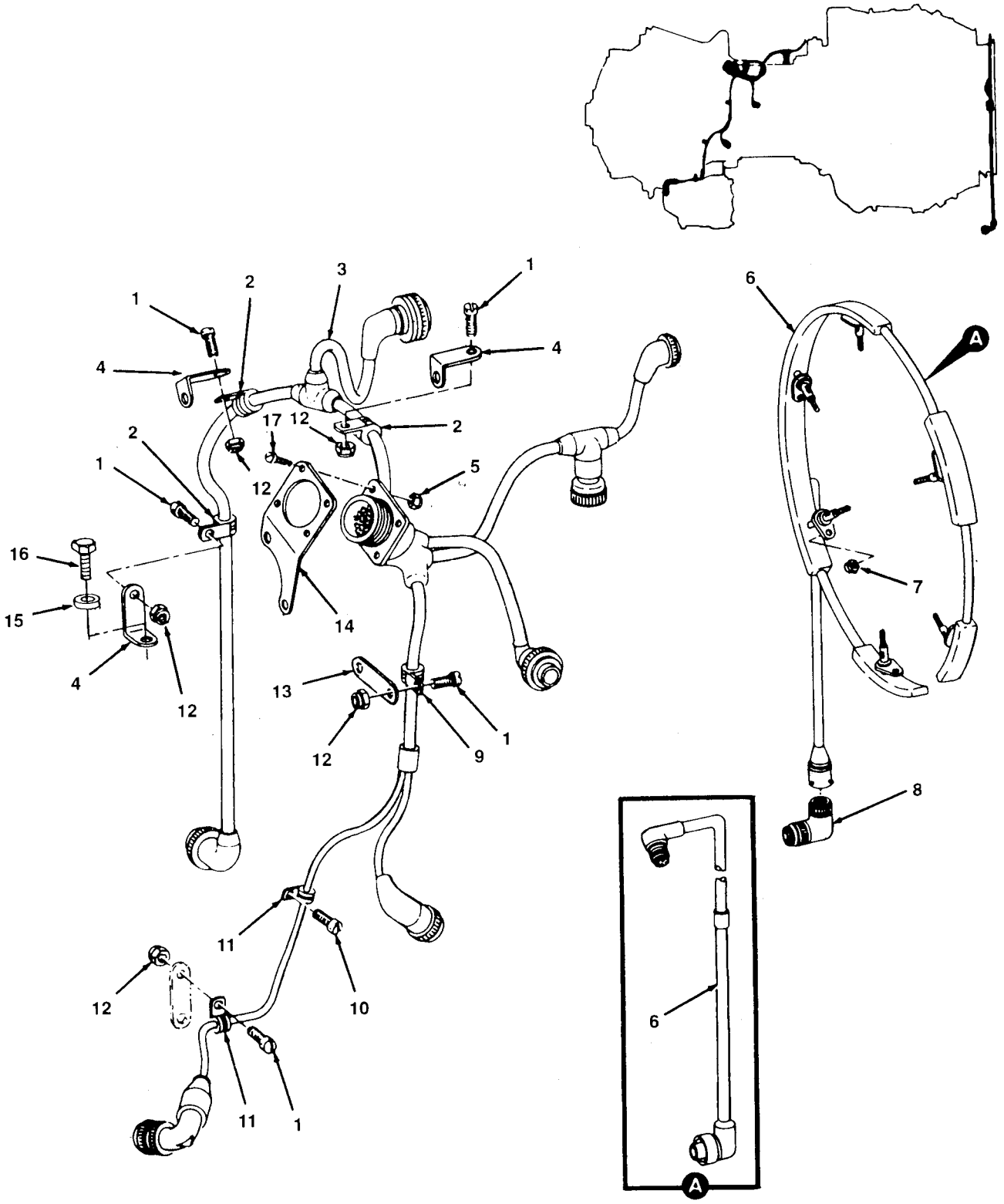

FIGURE 57. BRANCHED WIRING HARNESS, THERMOCOUPLE HARNESS, AND RELATED PARTS

(1) ITEM NO	(2) SMR CODE	(3) NSN	(4) CAGEC	(5) PART NUMBER	(6) DESCRIPTION AND USABLE ON CODE (UOC)	(7) QTY
					GROUP 0407 ELECTRICAL SYSTEM	
					FIG. 57 BRANCHED WIRING HARNESS, THERMOCOUPLE HARNESS,AND RELATED PARTS	
1	PAOZZ	5365-00-614-0246	96906	MS35266-63	SCREW,MACHINE	5
2	PAOZZ	5340-00-103-2945	96906	MS21919WCJ4	CLAMP,LOOP	3
3	PAOZZ	5995-00-868-1795	91547	1-300-242-02	WIRING HARNESS,BRAN	1
4	PAOZZ	5340-00-775-6514	91547	1-160-468-01	BRACKET,ANGLE	3
5	PAOZZ	5310-00-811-6419	96906	MS21042-04	NUT,SELF-LOCKING,EX	4
6	PAOZZ	5995-00-782-0636	91547	1-300-177-02	WIRING HARNESS,BRAN USED ON P/N 1-000-060-22 UOC:EZL	1
6	PAOZZ	6685-01-011-8035	91547	1-300-599-01	LEAD ASSEMBLY,THERM HARNESS USED ON P/N 1-000-060-23 UOC:EZP	1
7	PAOZZ	5310-00-844-4872	96906	MS21043-4	NUT,SELF-LOCKING,EX USED ON P/N 1-000-060-22 UOC:EZP	6
8	PAOZZ	5935-00-106-0096	91547	1-300-178-01	ADAPTER,CONNECTOR USED ON P/N 1-000-060-22 UOC:EZL	1
9	PAOZZ	5340-01-047-0632	96906	MS21122C5	CLAMP,LOOP	1
10	PAOZZ	5305-00-271-7746	88044	AN115807	SCREW,MACHINE USED ON P/N 1-000-060-22 UOC:EZL	1
10	PAOZZ	5305-00-720-8429	96906	MS35266-60	SCREW,MACHINE USED ON P/N 1-000-060-23 UOC:EZP	1
11	PAOZZ	5340-00-533-3505	81996	EAB700-3	CLAMP,LOOP	2
12	PAOZZ	5310-00-066-4289	96906	MS17826-3	NUT,SELF-LOCKING,SL	5
13	PAOZZ	2840-00-979-3741	91547	1-160-309-01	PLATE,MOUNTING STRA	1
14	PAOZZ	5340-00-775-6524	91547	1-160-457-02	BRACKET,ANGLE,ELECT	1
15	PAOZZ	5365-00-064-9434	91547	1-160-607-01	SPACER,SLEEVE	1
16	PAOZZ	5306-00-177-5571	96906	MS9519-20	BOLT,MACHINE	1
17	PAOZZ	5305-00-281-8540	88044	AN116905	SCREW,MACHINE	4
17	PAOZZ	5305-00-286-0214	88044	AN116916	SCREW,MACHINE USED ON P/N 1-000-060-22 UOC:EZL	4
17	PAOZZ	5305-00-276-2123	88044	AN116917	SCREW,MACHINE USED ON P/N 1-000-060-23 UOC:EZP	4
					END OF FIGURE	

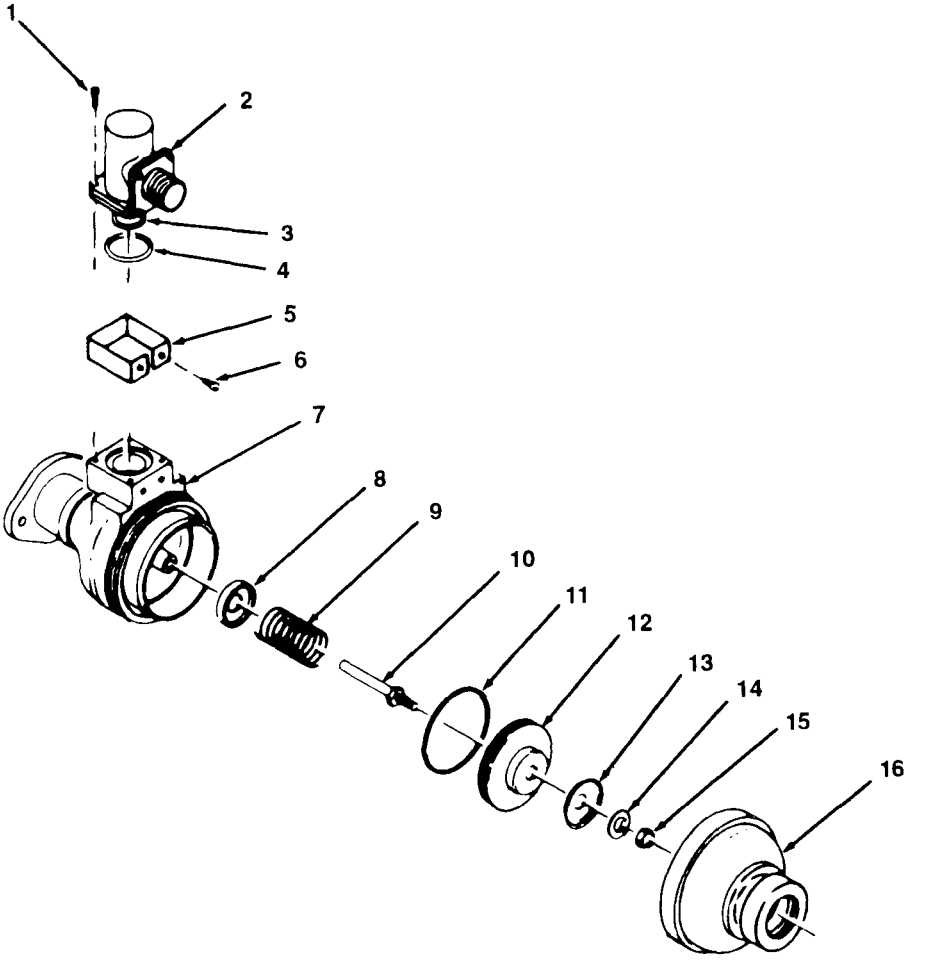

FIGURE 58. ANTI-ICING SOLENOID VALVE
(26330053)

GROUP 0407 ELECTRICAL SYSTEM

FIG. 58 ANTI-ICING SOLENOID VALVE
(26330053)

(1) ITEM NO	(2) SMR CODE	(3) NSN	(4) CAGEC	(5) PART NUMBER	(6) DESCRIPTION AND USABLE ON CODE (UOC)	(7) QTY
1	PAOZZ	5305-00-941-9437	96906	MS35275-215	SCREW,MACHINE	4
2	XAOZZ		45153	25820153	SOLENOID,ELECTRICAL	1
3	PAOZZ	5330-00-843-1507	77445	328419	PACKING,PREFORMED	1
4	PAOZZ	5330-00-895-9477	99167	25716068	PACKING,PREFORMED	1
5	PADZZ	2995-00-906-9713	45153	26326084	PLATE,VALVE IDENTIF	1
6	PADZZ	5305-00-052-8874	96906	MS24630-1	SCREW,TAPPING	2
7	XADZZ		80234	26524166	HOUSING ASSY,VALVE	1
8	PADZZ	5310-00-975-9407	45153	25816578	WASHER,RECESSED	1
9	PADZZ	5360-00-858-0001	45153	25816572	SPRING,HELICAL,COMP	1
10	PADZZ	3040-00-823-5992	45153	25816570	SHAFT,SHOULDERED	1
11	PADZZ	2805-00-990-3221	45153	25916207	RING,PISTON	2
12	PADZZ	2840-00-802-2722	45153	25926062	PISTON	1
13	PADZZ	2840-00-802-2718	45153	25816571	DISC,VALVE	1
14	PADZZ	5365-00-858-9431	99167	25716061	SPACER,PLATE	1
15	PADZZ	5310-00-059-9265	96906	MS21046C4	NUT,SELF-LOCKING,HE	1
16	PADZZ	2995-00-906-9710	45153	26326083	FITTING AND CONNECT	1

END OF FIGURE

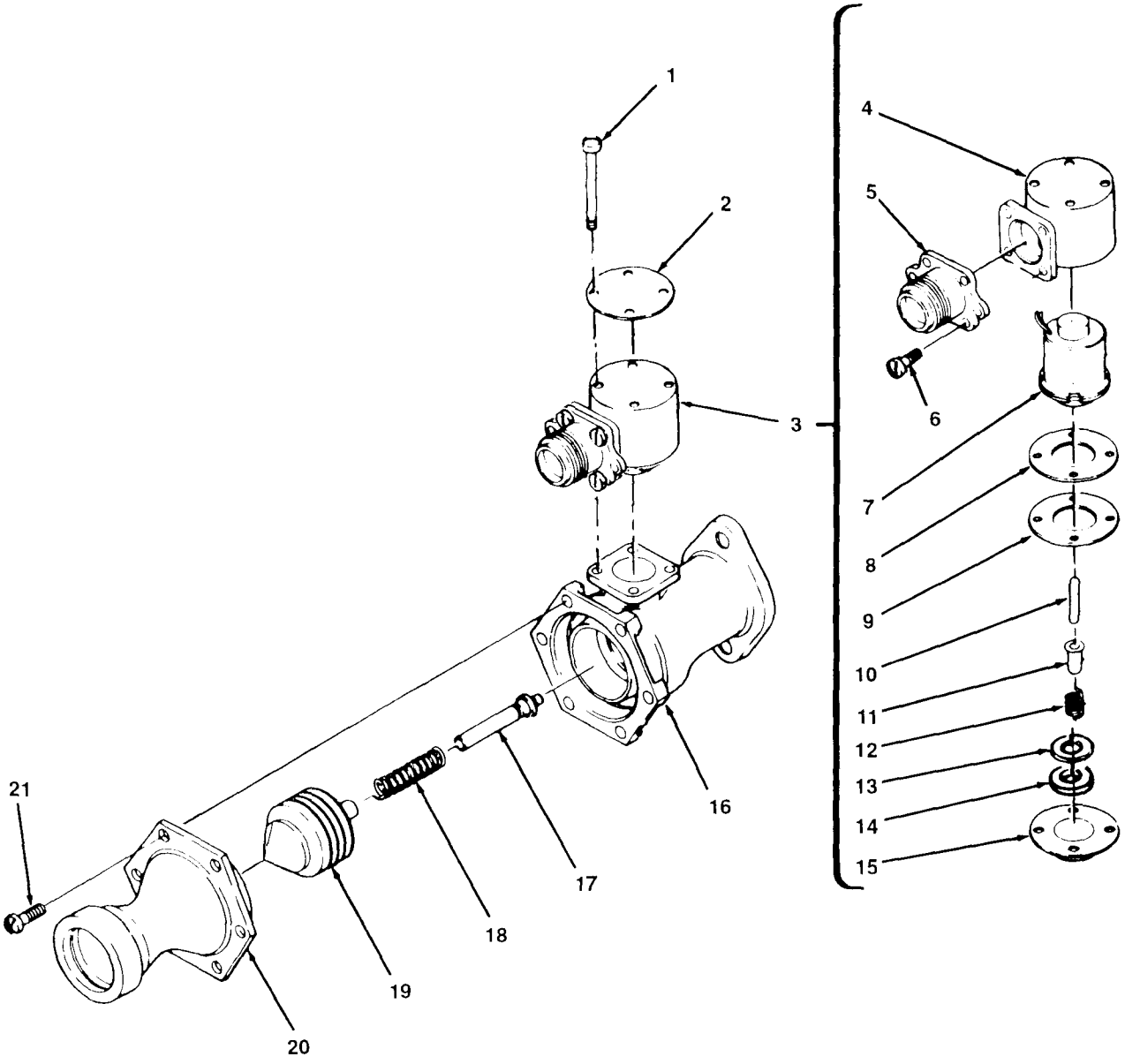

FIGURE 59. ANTI-ICING SOLENOID VALVE
(1-300-194-04)

(1)	(2)	(3)	(4)	(5)	(6)	(7)
ITEM NO	SMR CODE	NSN	CAGEC	PART NUMBER	DESCRIPTION AND USABLE ON CODE (UOC)	QTY
					GROUP 0407 ELECTRICAL SYSTEM	
					FIG. 59 ANTI-ICING SOLENOID VALVE (1-300-194-04)	
1	PADZZ	5305-00-065-1461	99643	19776	SCREW,MACHINE	4
2	PBDZZ	9905-00-052-4392	99643	19775	PLATE,IDENTIFICATIO	1
3	XAFZZ		99643	21506	VALVE ASSEMBLY,SOLE	1
4	PBDZZ	4810-00-111-3014	99643	19769	.HOUSING,SOLENOID	1
5	PBDZZ	4810-00-198-8611	99643	19865	.CONNECTOR,VALVE ASS	1
6	PADZZ	5305-00-941-3551	96906	MS35275-213	.SCREW,MACHINE	4
7	PADZZ	4810-00-111-3020	99643	19765	.SOLENOID AND SHUTOF	1
8	PBDZZ	5970-00-111-3019	99643	19817	.INSULATOR,PLATE	1
9	PBDZZ	4810-00-111-3012	99643	19818	.INSULATOR,SHUTOFF V	1
10	PADZZ	5315-00-436-5012	99643	19768	.PIN,SHOULDER,HEADLE	1
11	PBDZZ	4810-00-111-3013	99643	19771	.POPPET,SHUTOFF VALV	1
12	PBDZZ	5360-00-113-0918	99643	19772	.SPRING,HELICAL,COMP	1
13	PAFZZ	5310-00-228-8907	99643	19869	.WASHER,SPRING TENSI	1
14	PAFZZ	5310-00-443-9972	99643	19773	.WASHER,SPECIAL	1
15	PADZZ	4810-00-111-5356	99643	20404	.RETAINER,SHUTOFF VA	1
16	PADZZ	4810-00-052-4394	99643	19511	BODY,SHUTOFF VALVE	1
17	PBDZZ	1660-00-875-3194	99643	1478	GUIDE,VALVE,HOT AIR	1
18	PADZZ	5360-00-052-4398	99643	19763	SPRING,HELICAL,COMP	1
19	PBDZZ	4810-00-052-4396	99643	19759	PISTON,SHUTOFF VALV	1
20	PADZZ	4810-00-052-4395	99643	19758	HOUSING,VALVE,END	1
21	PADZZ	5305-00-939-9230	96906	MS35275-243	SCREW,MACHINE	6
					END OF FIGURE	

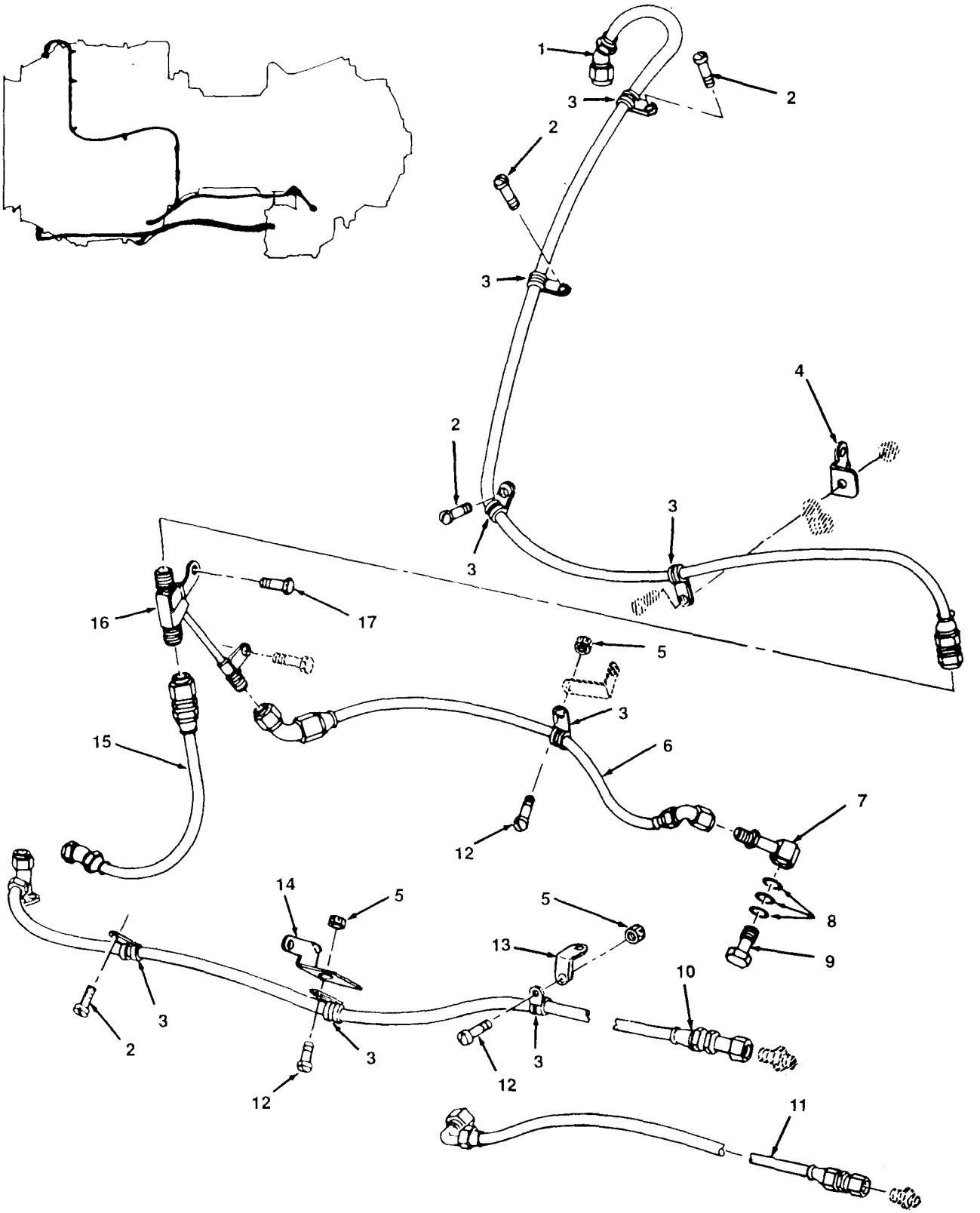

FIGURE 60. OIL LINES, HOSES, AND RELATED PARTS

GROUP 0408 OIL SYSTEM

FIG. 60 OIL LINES, HOSES, AND RELATED PARTS

(1) ITEM NO.	(2) SMR CODE	(3) NSN	(4) CAGEC	(5) PART NUMBER	(6) DESCRIPTION AND USABLE ON CODE (UOC)	(7) QTY
1	PAOZZ	4720-00-966-2203	91547	1-300-121-01	HOSE ASSEMBLY,NONME	1
2	PAOZZ	5305-00-969-6487	96906	MS35266-59	SCREW,MACHINE	4
3	PAOZZ	5340-01-047-0632	96906	MS21122C5	CLAMP,LOOP	8
4	PAOZZ	5340-00-656-8549	91547	1-160-135-01	BRACKET,CLAMP	1
5	PAOZZ	5310-00-066-4289	96906	MS17826-3	NUT,SELF-LOCKING,SL	3
6	PAOZZ	4720-00-195-9789	91547	1-300-225-01	HOSE ASSEMBLY,NONME	1
7	PAOZZ	2840-00-776-7086	91547	1-160-560-01	ADAPTER ASSEMBLY,OI	1
8	PAOZZ	5330-00-167-5166	81349	M83248/1-905	PACKING,PREFORMED	3
9	PAOZZ	2840-00-775-6512	91547	1-160-469-01	CONNECTOR,OIL LINE	1
10	PAOZZ	4720-00-966-2201	91547	1-300-134-01	NOSE ASSEMBLY, NONME	1
11	PAOZZ	4720-00-763-7562	91547	1-300-377-01	HOSE ASSEMBLY,LOW P	1
12	PAOZZ	5365-00-614-0246	96906	MS35266-63	SCREW,MACHINE	3
13	PAOZZ	5340-00-775-6514	91547	1-160-468-01	BRACKET,ANGLE	1
14	PAOZZ	5340-00-656-8550	91547	1-160-136-01	BRACKET,CLAMP	1
15	PAOZZ	4720-00-986-9991	91547	1-300-054-01	HOSE ASSEMBLY,NONME	1
16	PAOZZ	2995-00-957-2709	91547	1-170-410-02	BRACKET,ENGINE ACCE	1
17	PAOZZ	5306-00-259-1054	96906	MS9530-13	BOLT,MACHINE	1

END OF FIGURE

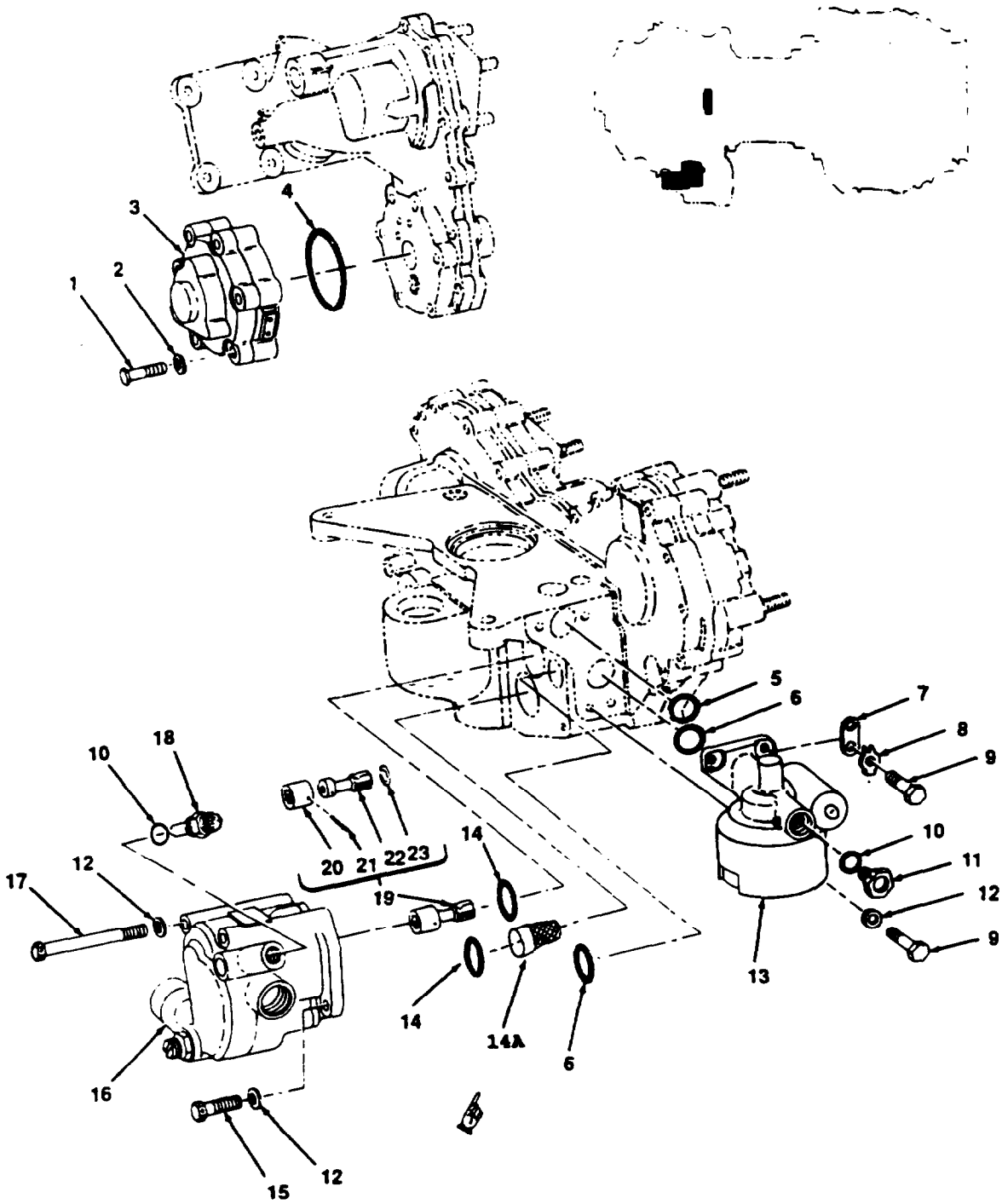

FIGURE 61. FLUID FILTER BODY, ROTARY (BOOSTER) PUMP ASSEMBLY, ROTARY (OIL) PUMP ASSEMBLY, TEMPERATURE TRANSMITTER, AND RELATED PARTS

(1) ITEM NO.	(2) SMR CODE	(3) NSN	(4) CAGEC	(5) PART NUMBER	(6) DESCRIPTION AND USABLE ON CODE (UOC)	(7) QTY
					GROUP 0408 OIL SYSTEM	
					FIG. 61 FLUID FILTER BODY, ROTARY (BOOSTER) PUMP ASSEMBLY, ROTARY (OIL) PUMP ASSEMBLY, TEMPERATURE TRANSMITTER,AND RELATED PARTS	
1	PAOZZ	5306-01-073-3625	96906	MS9529-19	BOLT,MACHINE USED ON P/N 1-000-060-22 UOC:EZL	6
1	PAOZZ	5306-00-174-4683	96906	MS9565-19	BOLT,MACHINE USED ON P/N 1-000-060-23 UOC : EZP	6
2	PAOZZ	5310-00-167-0834	88044	AN960-10L	WASHER,FLAT	6
3	PAOZZ	4320-00-067-8128	91547	1-300-221-03	PUMP,ROTARY (BOOSTER)	1
4	PAOZZ	5330-00-165-1948	81349	MS3248/1-230	PACKING,PREFORMED	1
5	PAOZZ	5330-00-166-1063	81349	M83248/1-114	PACKING,PREFORMED	1
6	PAOZZ	5330-00-166-1066	81349	M83248/1-115	PACKING,PREFORMED	2
7	PAOZZ	3040-00-964-2109	91547	1-160-482-02	CONNECTING LINK,RIG	1
8	PAOZZ	5310-00-658-5299	91547	STD3023K2	WASHER,KEY	2
9	PAOZZ	5306-00-177-5559	96906	MS9530-10	BOLT,MACHINE	4
10	PAOZZ	5330-00-020-0203	81349	M83248/1-904	PACKING,PREFORMED	2
11	PAOZZ	5365-00-837-0856	96906	MS24391D4L	PLUG,MACHINE THREAD	1
12	PAOZZ	5310-00-167-0835	88044	AN960-416L	WASHER, FLAT	6
13	PAOOO	2945-01-303-5111	91547	1-080-460-02	FILTER BODY,FLUID SEE FIG. 62 FOR BREAKDOWN	1
14	PAOZZ	5330-00-167-5111	81349	M83248/1-122	PACKING,PREFORMED	2
14A	PAOZZ	4730-01-422-7845	18350	29670	STRAINER ELEMENT	1
15	PAOZZ	5306-01-073-3626	96906	MS9530-11		2
16	PAODD	4320-01-182-9057	91547	1-300-212-04	PUMP,ROTARY (OIL) SEE FIG. 63 FOR BREAKDOWN	1
17	PAOZZ	5306-01-073-3627	96906	MS9530-40	BOLT,MACHINE	2
18	PAOZZ	6685-00-580-9651	96906	MS28034-3	TRANSMITTER,TEMPERA	1
19	PAOOO	3040-00-766-8633	91547	1-080-350-04	SHAFT ASSEMBLY SHOD	1
20	XAOZZ		91547	1-080-279-02	.COUPLING,SPLINED,OI	1
21	PADZZ	5315-00-806-5316	96906	MS9105-59	.PIN,STRAIGHT,HEA	1
22	XAOZZ		91547	1-080-276-03	.SHAFT,SHOULDERED	1
23	PAOZZ	5365-00-680-3905	91547	STD3033B7	.RING,RETAINING	1

END OF FIGURE

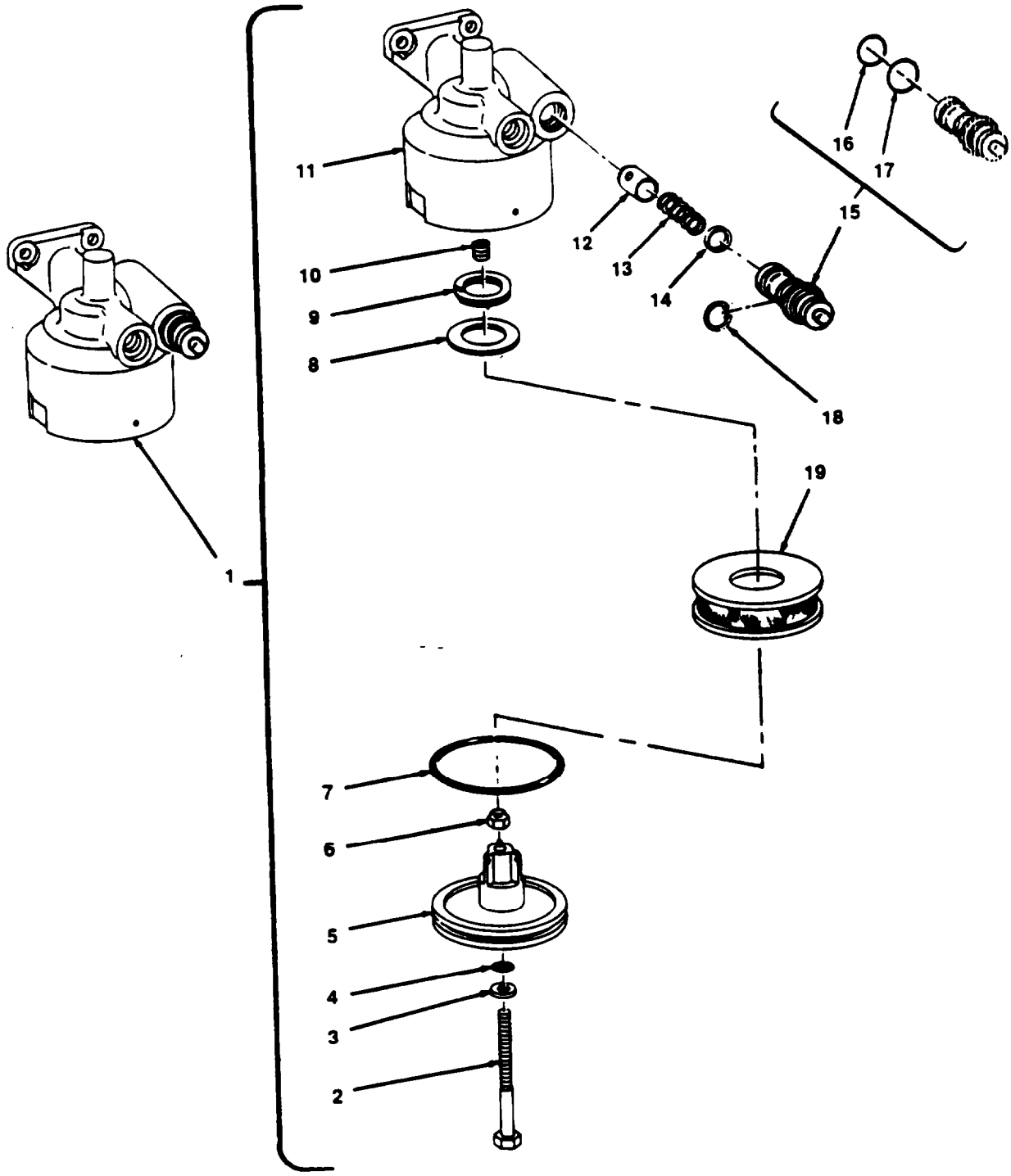

FIGURE 62. FLUID FILTER BODY, PRESSURE INDICATOR, AND FILTERING DISK

(1)	(2)	(3)	(4)	(5)	(6)	(7)
ITEM NO	SMR CODE	NSN	CAGEC	PART NUMBER	DESCRIPTION AND USABLE ON CODE (UOC)	QTY
					GROUP 0408 OIL SYSTEM	
					FIG. 62 FLUID FILTER BODY,PRESSURE INDICATOR, AND FILTERING DISK	
1	XAOZZ		94592	9382-4022	FILTER,FLUID	1
2	PAOZZ	5306-00-446-6481	94592	SP806	.BOLT,MACHINE	1
3	PAOZZ	5310-00-446-6479	94592	SP805	.WASHER,FLAT	1
4	PAOZZ	5330-00-846-0502	96906	MS9241-010	.PACKING,PREFORMED	1
5	PAOZZ	2945-00-176-3682	94592	1840-4017	.COVER,OIL FILTER	1
6	PAOZZ	5310-00-984-6705	96906	MS9361-10	.NUT,PLAIN,HEXAGON	1
7	PAOZZ	5330-00-067-9994	96906	MS29561-146	.PACKING,PREFORMED	1
8	PAOZZ	2945-00-446-6446	94592	SP809	.END PLATE,OIL FILTE	1
9	PAOZZ	5340-00-331-5106	94592	SP801	.CLAMP,GEAR	1
10	PAOZZ	5340-00-290-4497	96906	MS124736	.INSERT,SCREW THREAD	1
11	XAOZZ		94592	3040-4001	.HOUSING SECTION, OIL	1
12	PAOZZ	4820-00-176-9233	94592	4630-4000	.VALVE,RELIEF,PRESSU	1
13	PAOZZ	5360-00-241-5298	94592	5830-4007	.SPRING,HELICAL,COMP	1
14	PAOZZ	5340-00-176-0681	94592	5320-4001	.RETAINER,HELICAL CO	1
15	PAOZZ	6620-01-376-3205	91547	1-300-661-01	INDICATOR,PRESSURE	1
16	PAOZZ	5330-00-166-0988	81349	M83248/1-013	.PACKING,PREFORMED	1
17	PAOZZ	5330-00-166-0990	81349	M83248/1-014	.PACKING,PREFORMED	1
18	PAOZZ	5365-00-687-3379	96906	MS16625-1062	RING,RETAINING	1
19	PAOZZ	2945-01-115-9547	18350	AC-A926E-440	FILTERING DISKK,FLUI	1
					END OF FIGURE	

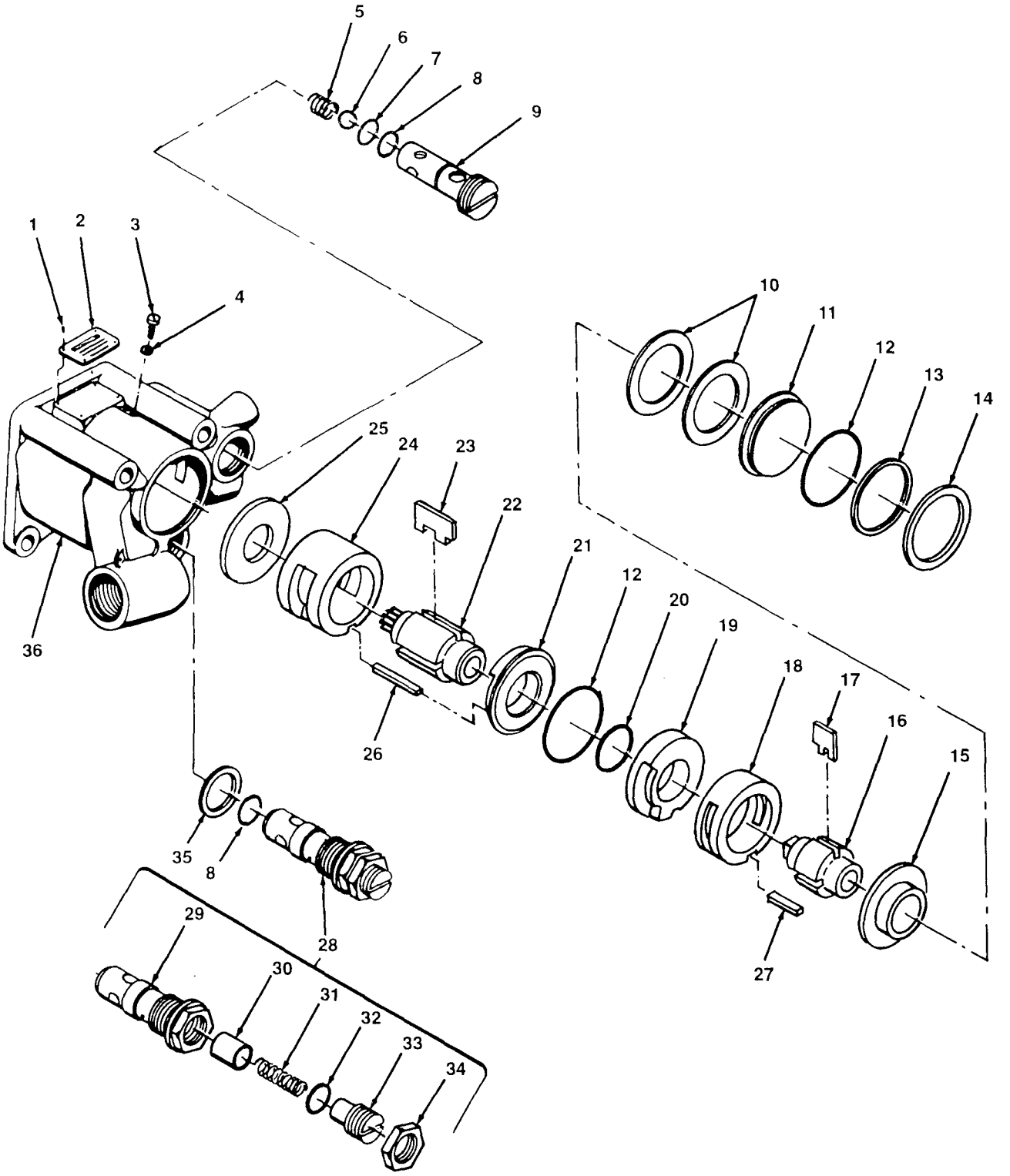

FIGURE 63. ROTARY (OIL) PUMP ASSEMBLY

(1) ITEM NO	(2) SMR CODE	(3) NSN	(4) CAGEC	(5) PART NUMBER	(6) DESCRIPTION AND USABLE ON CODE (UOC)	(7) QTY
					GROUP 0408 OIL SYSTEM	
					FIG.63 ROTARY (OIL) PUMP ASSEMBLY	
1	PBDZZ	5305-00-253-5603	96906	MS21318-1	SCREW,DRIVE	4
2	XDDZZ		51663	RB34893	PLATE,IDENTIFICATIO	1
3	PADZZ	5305-00-866-7248	51663	RA17197-1	SETSCREW	2
4	PADZZ	5310-00-184-8966	88044	AN960PD8	WASHER,FLAT	2
5	PADZZ	5360-00-903-8615	51663	RA17361	SPRING,HELICAL,COMP	1
6	PADZZ	3110-00-958-7325	96906	MS19060-4820	BALL-BEARING	1
7	PADZZ	5330-00-166-0990	81349	M83248/1-014	PACKING,PREFORMED	1
8	PAOZZ	5330-00-166-0991	81349	M83248/1-015	PACKING,PREFORMED	2
9	PADZZ	4320-00-065-5505	51663	RD17355	HOUSING,CHECK VALVE	1
10	PADZZ	5310-00-901-4954	51663	RS26038-3	WASHER,SPRING TENSI	2
11	PADZZ	5340-00-065-5501	51663	RB17354	COVER,ACCESS	1
12	PAOZZ	5330-00-166-8390	81349	M83248/1-030	PACKING,PREFORMED	2
13	PADZZ	5365-00-902-8533	51663	RB17363-1	SHIM	V
13	PADZZ	5365-00-902-8534	51663	RB17363-2	SPACER,RING	V
13	PADZZ	5365-00-902-5601	51663	RB17363-3	SPACER,RING	V
13	PADZZ	5365-00-902-5602	51663	RB17363-4	SPACER,RING	V
14	PADZZ	5365-00-527-1492	80756	RR181S	RING,RETAINING	1
15	PADZZ	3120-00-065-5536	51663	RB17362	BEARING,SLEEVE	1
16	PADZZ	4320-00-065-5504	51663	RD17353	ROTOR ASSEMBLY,PUMP	1
17	PADZZ	4320-00-176-4119	51663	16464-4	BLADE,PUMP	4
18	PADZZ	4320-00-962-0088	51663	RS26103-138	LINER,ROTARY PUMP	1
19	PADZZ	3120-01-244-8729	51663	RB17357-1	BEARING,SLEEVE	1
20	PADZZ	5330-01-184-7534	51663	RB25112	PACKING,PREFORMED	1
21	PADZZ	3120-00-065-5533	51663	RB17356	BEARING,SLEEVE	1
22	PADZZ	4320-00-065-5503	51663	RD17352	ROTOR,PUMP	1
23	PADZZ	4320-00-065-5500	51663	RB16464-5	BLADE,PUMP	4
24	PADZZ	4320-00-065-5508	51663	RS26005-94	LINER,PUMP	1
25	PADZZ	3120-00-065-5535	51663	RB17358	BEARING,SLEEVE	1
26	PADZZ	5315-00-764-8229	51663	RA17196-2	KEY,MACHINE	1
27	PADZZ	5315-00-765-2853	51663	RA17196-1	KEY,MACHINE	1
28	PADZZ	4820-00-065-5502	51663	RB17365	VALVE,RELIEF,PRESSU	1
29	XADZZ		51663	RD17366	.VALVE HOUSING	1
30	PADZZ	4820-00-676-1883	51663	RA16224	.VALVE,RELIEF PUMP	1
31	XAFZZ		51663	RA16223-3	.SPRING,HELICAL,COMP	1
32	PADZZ	5330-00-852-4230	96906	MS9241-015	.PACKING,PREFORMED	1
33	XADZZ		51663	RB16227	.SCREW,ADJUSTING,VAL	1
34	XADZZ		51663	RA16226	.NUT,PLAIN,HEXAGON	1
35	PADZZ	5365-00-995-7060	51663	RA16219	SPACER,RING	1
36	PADZZ	4320-00-065-5507	51663	RR17351	HOUSING,OIL PUMP	1
					END OF FIGURE	

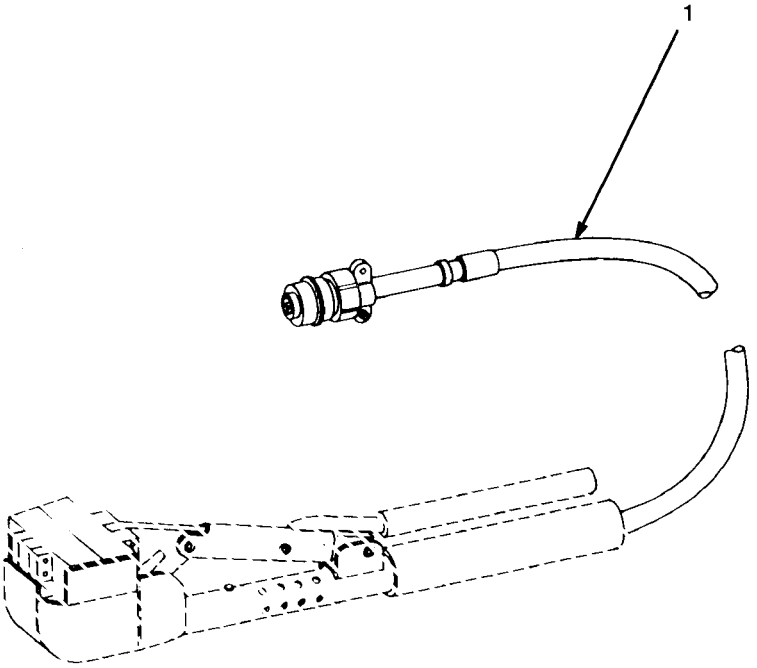

FIGURE 64. PROBE ASSEMBLY
(BH7434L40)

(1) ITEM NO	(2) SMR CODE	(3) NSN	(4) CAGEC	(5) PART NUMBER	(6) DESCRIPTION AND USABLE ON CODE (UOC)	(7) QTY
					GROUP 8100 SPECIAL TOOLS (REPAIR PARTS)	
					FIG. 64 PROBE ASSEMBLY (BH7434L40)	
1	PFDZZ	6685-01-355-3538	98869	BH11748	THERMOCOUPLE,HEATIN	1
					END OF FIGURE	

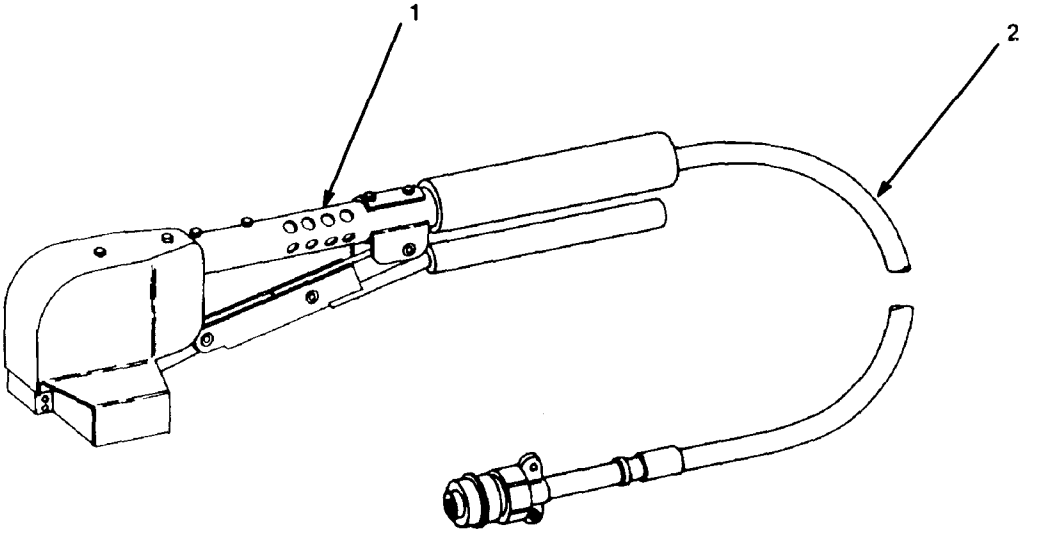

FIGURE 65. PROBE ASSEMBLY
(BH7434R40)

(1) ITEM NO	(2) SMR CODE	(3) NSN	(4) CAGEC	(5) PART NUMBER	(6) DESCRIPTION AND USABLE ON CODE (UOC)	(7) QTY
					GROUP 8100 SPECIAL TOOLS (REPAIR PARTS)	
					FIG. 65 PROBE ASSEMBLY (BH7434R40)	
1	PFDZZ	4540-01-349-9605	79221	G2E173A	HEATING ELEMENT,ELE	1
2	PFDZZ	6685-01-355-3538	98869	BH11748	THERMOCOUPLE,HEATIN	1
					END OF FIGURE	

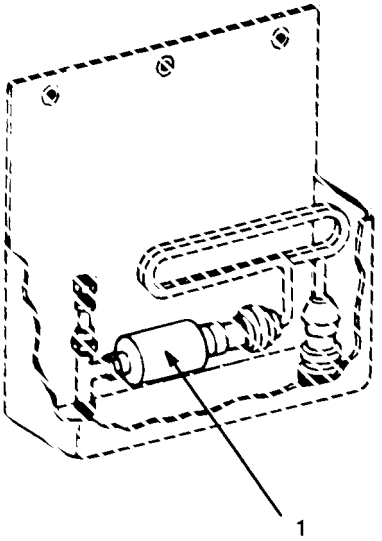

FIGURE 66. MAINTENANCE KIT
(LTCT13726)

(1) ITEM NO	(2) SMR CODE	(3) NSN	(4) CAGEC	(5) PART NUMBER	(6) DESCRIPTION AND USABLE ON CODE (UOC)	(7) QTY
					GROUP 8100 SPECIAL TOOLS (REPAIR PARTS)	
					FIG. 66 MAINTENANCE KIT (LTCT13726)	
1	PBOZZ	5930-00-156-3380	91547	LTCT9374	SWITCH,PRESSURE	1
					END OF FIGURE	

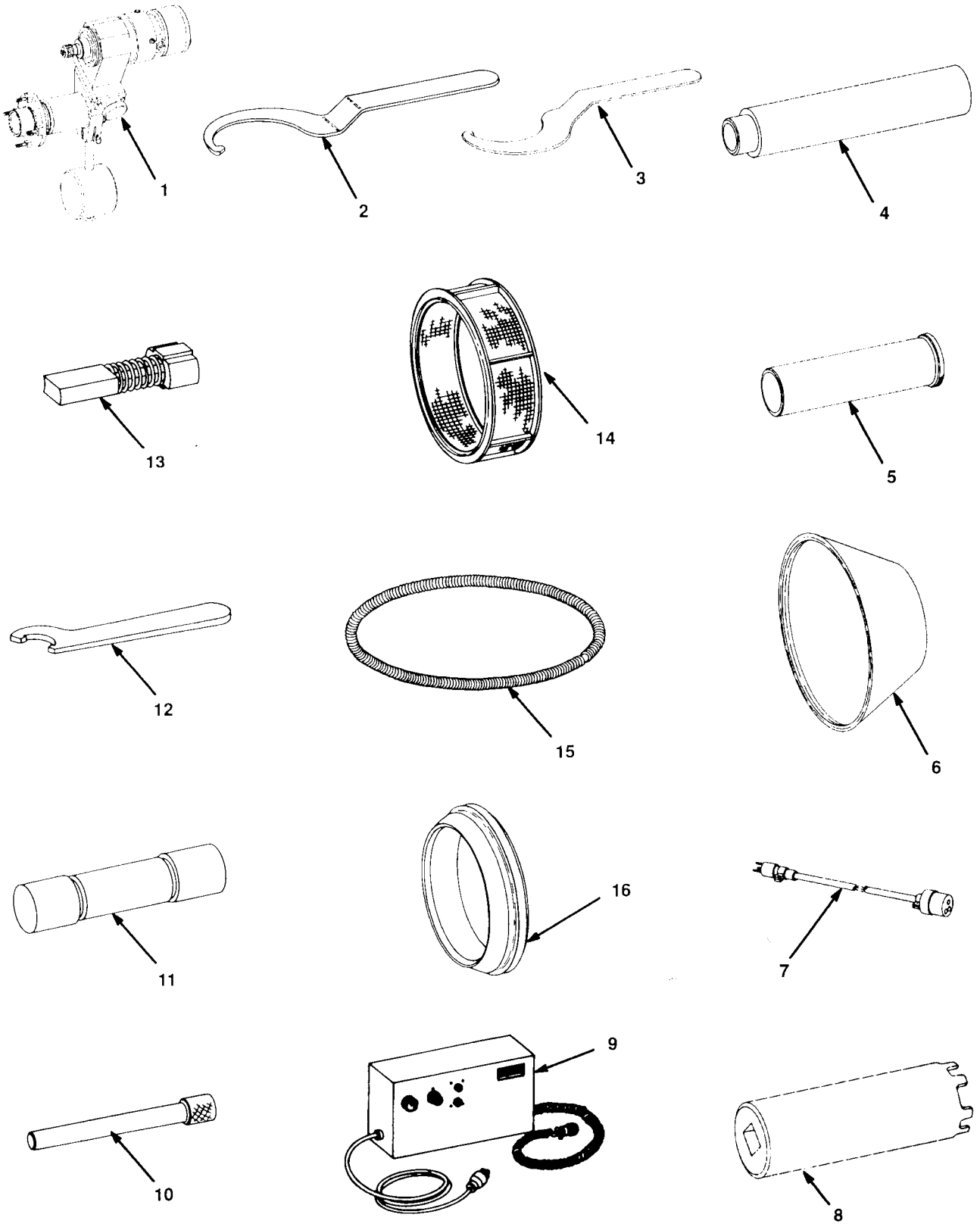

FIGURE 67. MAINTENANCE KIT
(LTCT2020-01)

(1) ITEM NO	(2) SMR CODE	(3) NSN	(4) CAGEC	(5) PART NUMBER	(6) DESCRIPTION AND USABLE ON CODE (UOC)	(7) QTY
					GROUP 8100 SPECIAL TOOLS (REPAIR PARTS)	
					FIG. 67 MAINTENANCE KIT (LTCT2020-01)	
1	PBFDD	3680-01-329-9891	91547	LTCT2125-01	FINISHING MACHINE,A	1
2	PBFZZ	5120-00-890-2760	91547	LTCT4402-01	WRENCH,SPANNER	1
3	PBFZZ	5120-00-073-8321	91547	LTCT4402-02	WRENCH,SPANNER	1
4	PBFZZ	3040-00-073-8508	91547	LTCT4405	SHAFT,MAINTENANCE K	1
5	PBFZZ	3120-00-082-0429	91547	LTCT4406	BUSHING,SLEEVE	1
6	PBFZZ	2840-00-448-9580	91547	LTCT4408	COVER,PROTECTIVE	1
7	PBFZZ	5995-00-079-8885	91547	LTCT4409	CABLE ASSEMBLY,SPEC	1
8	PBFZZ	5120-00-082-0408	91547	LTCT4450	SOCKET,WRENCH,FACE	1
9	PBFZZ	5998-00-079-8822	91547	LTCT9260	ELETRONIC COMPONEN ASSEMBLY	1
10	PAFZZ	3455-00-943-2345	91547	LTCT9261	CUTTER,MILLING CARB	1
11	PBFZZ	5920-00-955-9392	91547	LTCT9262	FUSE,CARTRIDGE	1
12	PBFZZ	5120-00-886-1794	91547	LTCT9263	WRENCH,SPANNER	1
13	PBFZZ	5977-00-955-9484	91547	LTCT9264	HOLDER,ELECTRICAL C	1
14	PBFZZ	2940-00-924-3620	91547	LTCT9266	STRAINER ELEMENT,AI	1
15	PBFZZ	5360-00-492-3218	91547	LTCT9396	BUSHING,SLEEVE	1
16	PAFZZ	5365-00-003-1165	91547	1-100-411-04	RING,EXTERNALLY THR	1
					END OF FIGURE	

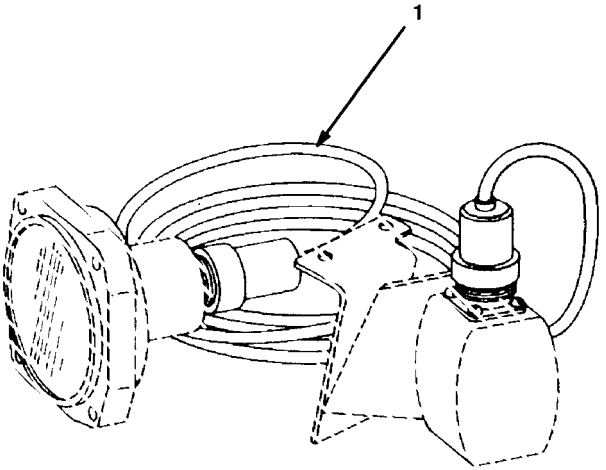

FIGURE 68. INLET GUIDE VANE POSITION TRANSMITTER ASSEMBLY

(1) ITEM NO	(2) SMR CODE	(3) NSN	(4) CAGEC	(5) PART NUMBER	(6) DESCRIPTION AND USABLE ON CODE (UOC)	(7) QTY
					GROUP 8100 SPECIAL TOOLS (REPAIR PARTS)	
					FIG. 68 INLET GUIDE VANE POSITION TRANSMITTER ASSEMBLY	
1	PFDZZ	5995-00-491-7108	91547	LTCT13846	CABLE ASSEMBLY,SPEC	1
					END OF FIGURE	

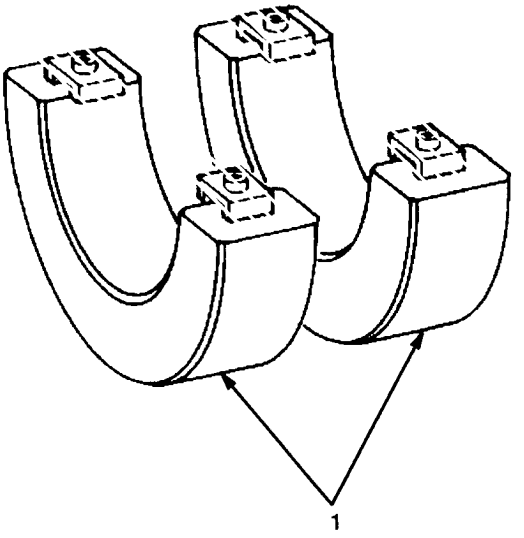

FIGURE 69. BEARING ADAPTER SET
(LTCT4028)

(1) ITEM NO	(2) SMR CODE	(3) NSN	(4) CAGEC	(5) PART NUMBER	(6) DESCRIPTION AND USABLE ON CODE (UOC)	(7) QTY
					GROUP 8100 SPECIAL TOOLS (REPAIR PARTS)	
					FIG. 69 BEARING ADAPTER SET (LTCT4028)	
1	XDDZZ		91547	LTCT4006-03	ADAPTER,BEARING HOL	1
					END OF FIGURE	

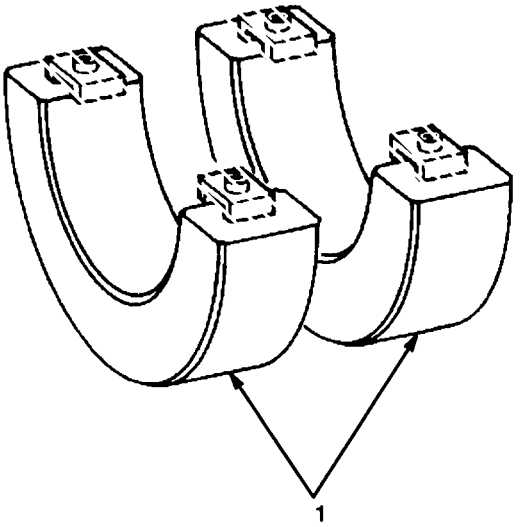

FIGURE 70. BEARING ADAPTER SET
(LTCT4029)

(1) ITEM NO	(2) SMR CODE	(3) NSN	(4) CAGEC	(5) PART NUMBER	(6) DESCRIPTION AND USABLE ON CODE (UOC)	(7) QTY
					GROUP 8100 SPECIAL TOOLS (REPAIR PARTS)	
					FIG. 70 BEARING ADAPTER SET (LTCT4029)	
1	XDDZZ		91547	LTCT4006-02	ADAPTER,BEARING HOL	1
					END OF FIGURE	

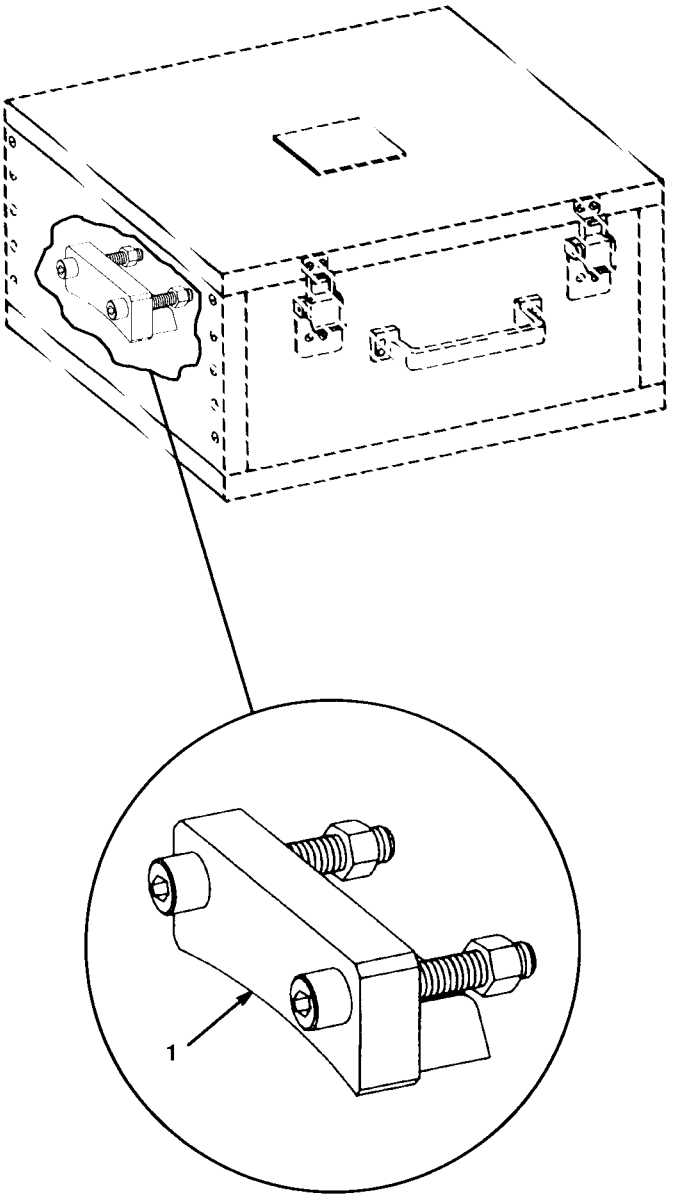

FIGURE 71. HOUSING PRESSURE TESTER

(1) ITEM NO	(2) SMR CODE	(3) NSN	(4) CAGEC	(5) PART NUMBER	(6) DESCRIPTION AND USABLE ON CODE (UOC)	(7) QTY
					GROUP 8100 SPECIAL TOOLS (REPAIR PARTS)	
					FIG. 71 HOUSING PRESSURE TESTER	
1	PFDZZ	4920-00-997-4713	91547	LTCT4816	FIXTURE,PRESSURE TE	1
					END OF FIGURE	

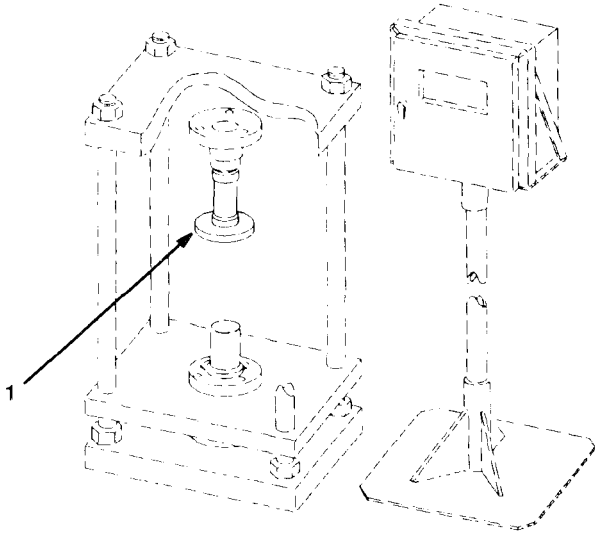

FIGURE 72. HYDRAULIC PRESS

(1) ITEM NO	(2) SMR CODE	(3) NSN	(4) CAGEC	(5) PART NUMBER	(6) DESCRIPTION AND USABLE ON CODE (UOC)	(7) QTY
					GROUP 8100 SPECIAL TOOLS (REPAIR PARTS)	
					FIG. 72 HYDRAULIC PRESS	
1	XBDZZ		91547	LTCT2958	ADAPTER,HYDRAULIC	1
					END OF FIGURE	

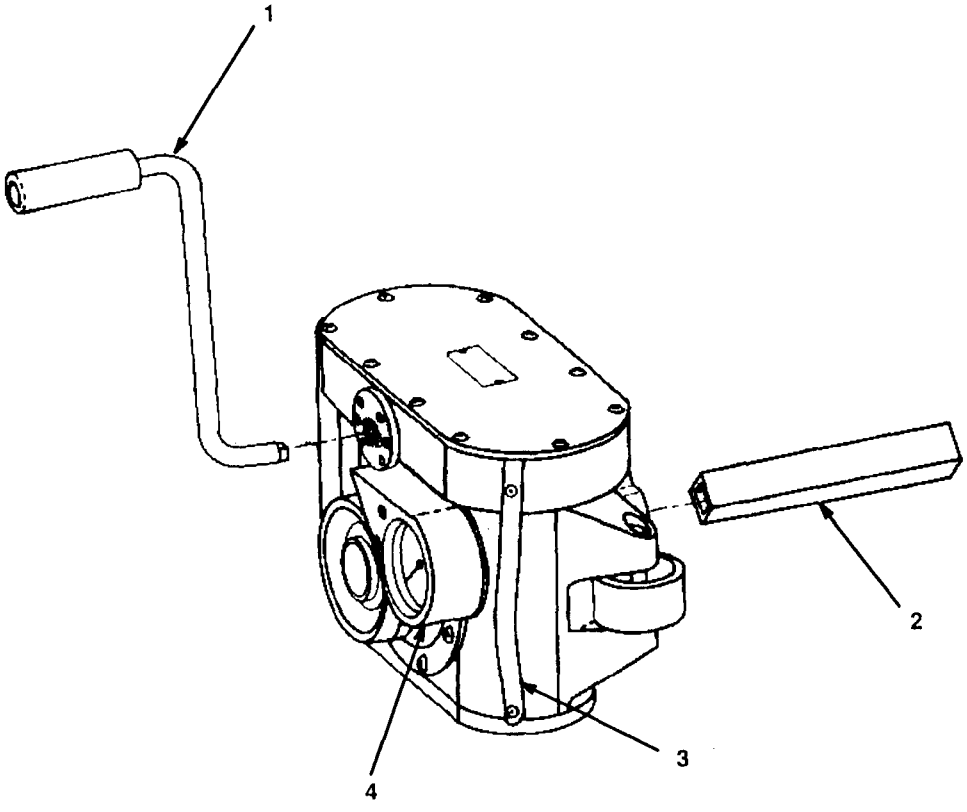

FIGURE 73. TORQUE WRENCH

(1) ITEM NO	(2) SMR CODE	(3) NSN	(4) CAGEC	(5) PART NUMBER	(6) DESCRIPTION AND USABLE ON CODE (UOC)	(7) QTY
					GROUP 8100 SPECIAL TOOLS (REPAIR PARTS)	
					FIG. 73 TORQUE WRENCH	
1	XDFZZ		30891	PD2546	HANDLE,TORQUE WRENC	1
2	PBFZZ	5120-00-152-1990	92059	PD2547-8	BAR,SOCKET WRENCH H	1
3	PBFZZ	5120-00-152-1992	95059	PD2545	HANDLE,TORQUE WRENC	1
4	PBFZZ	5210-00-152-0104	92059	PD2555	INDICATOR ASSEMBLY	1

END OF FIGURE

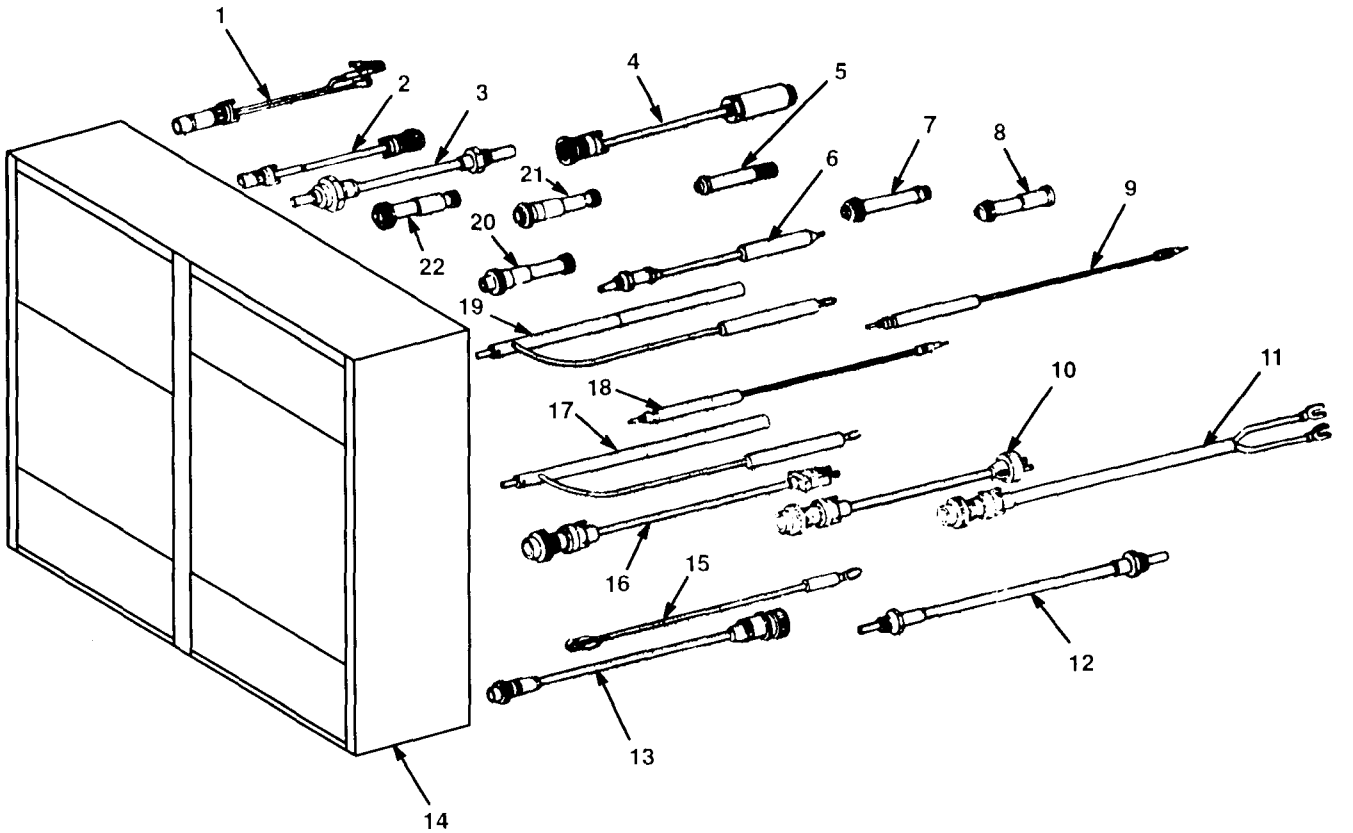

FIGURE 74. JET IGNITION TEST SET

(1) ITEM NO	(2) SMR CODE	(3) NSN	(4) CAGEC	(5) PART NUMBER	(6) DESCRIPTION AND USABLE ON CODE (UOC)	(7) QTY
					GROUP 8100 SPECIAL TOOLS (REPAIR PARTS)	
					FIG. 74 JET IGNITION TEST SET	
1	XBDZZ		77820	11-6530	ADAPTER,LEAD,ELECTR	1
2	XBDZZ		77820	11-6527	ADAPTER,LEAD,ELECTR	1
3	XBDZZ		77820	11-6086	LEAD,OUTPUT,IGNITIO	1
4	XBDZZ		77820	11-6277	ADAPTER,LEAD,ELECTR	1
5	XBDZZ		91547	LTCT9268	ADAPTER,INPUT LEAD	1
6	XBDZZ		77820	11-6085	LEAD,GAP TESTING	1
7	XBDZZ		91547	LTCT9269	ADAPTER,TEST	1
8	XBDZZ		77820	11-6105	ADAPTER,LEAD	1
9	XBDZZ		77820	11-4740	ADAPTER,OUTPUT	1
10	XBDZZ		77820	11-6021	CABLE,POWER	1
11	XBDZZ		91547	LTCT9273	CABLE ASSEMBLY	1
12	XBDZZ		91547	LTCT9277	LEAD AND CONDUIT AS	1
13	XBDZZ		91547	LTCT9272	CABLE ASSEMBLY,POWE	1
14	XDDZZ		91547	LTCT9379	TESTER,IGNITION SYS	1
15	XBDZZ		91547	LTCT9274	LEAD,GROUND	1
16	XBDZZ		91547	LTCT9276	CABLE ASSEMBLY	1
17	XBDZZ		91547	LTCT9270	LEAD,TEST PROBE	1
18	XBDZZ		91547	LTCT9275	LEAD,TEST,IGNITION	1
19	XBDZZ		91547	LTCT9271	LEAD,TEST PROBE	1
20	XBDZZ		91547	LTCT9267	ADAPTER,IGNITION	1
21	XBDZZ		77820	11-4737	ADAPTER,LEAD,ELECTR	1
22	XBDZZ		77820	11-4739	ADAPTER,INPUT LEAD	1

END OF FIGURE

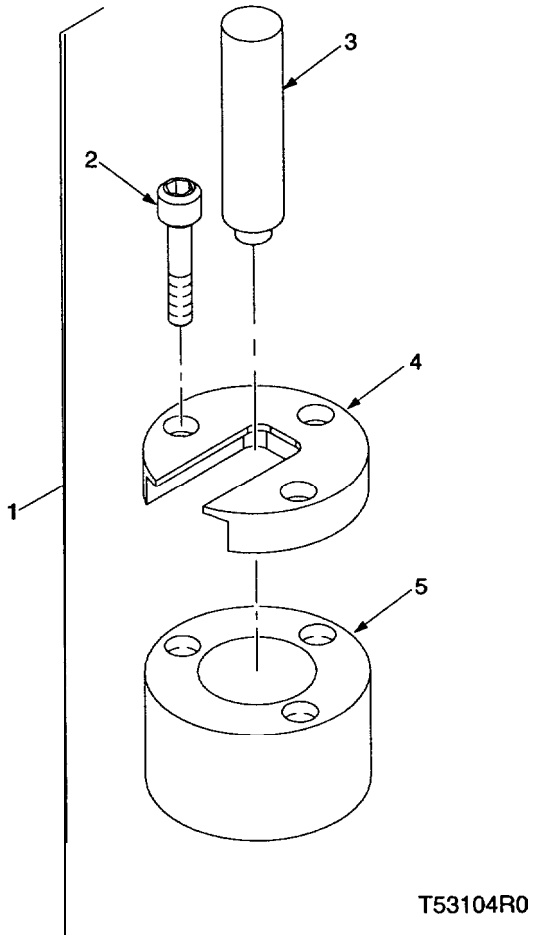

FIGURE 74A. GEARSHAFT BEARING DISASSEMBLY TOOL (LTCT30719–01)

(1) ITEM NO.	(2) SMR CODE	(3) NSN	(4) CAGEC	(5) PART NUMBER	(6) DESCRIPTION AND USABLE ON CODE (UOC)	(7) QTY
					GROUP 8100 SPECIAL TOOLS (REPAIR PARTS)	
					FIG. 74A GEARSHAFT BEARING DISASSEMBLY TOOL (LTCT30719–01)	
1	PFDZZ		06848	LTCT30719–01	DISASSEMBLY TOOL, GEARSHAFT BEARING	1
2	XDDZZ		96906	MS16995-18	.SCREW, CAP	3
3	XDDZZ		06848	LTCT30719-08	.DRIVER	1
4	XDDZZ		06848	LTCT30719-07	.PLATE	1
5	XDDZZ		06848	LTCT30719-06	.BASE	1
					END OF FIGURE	

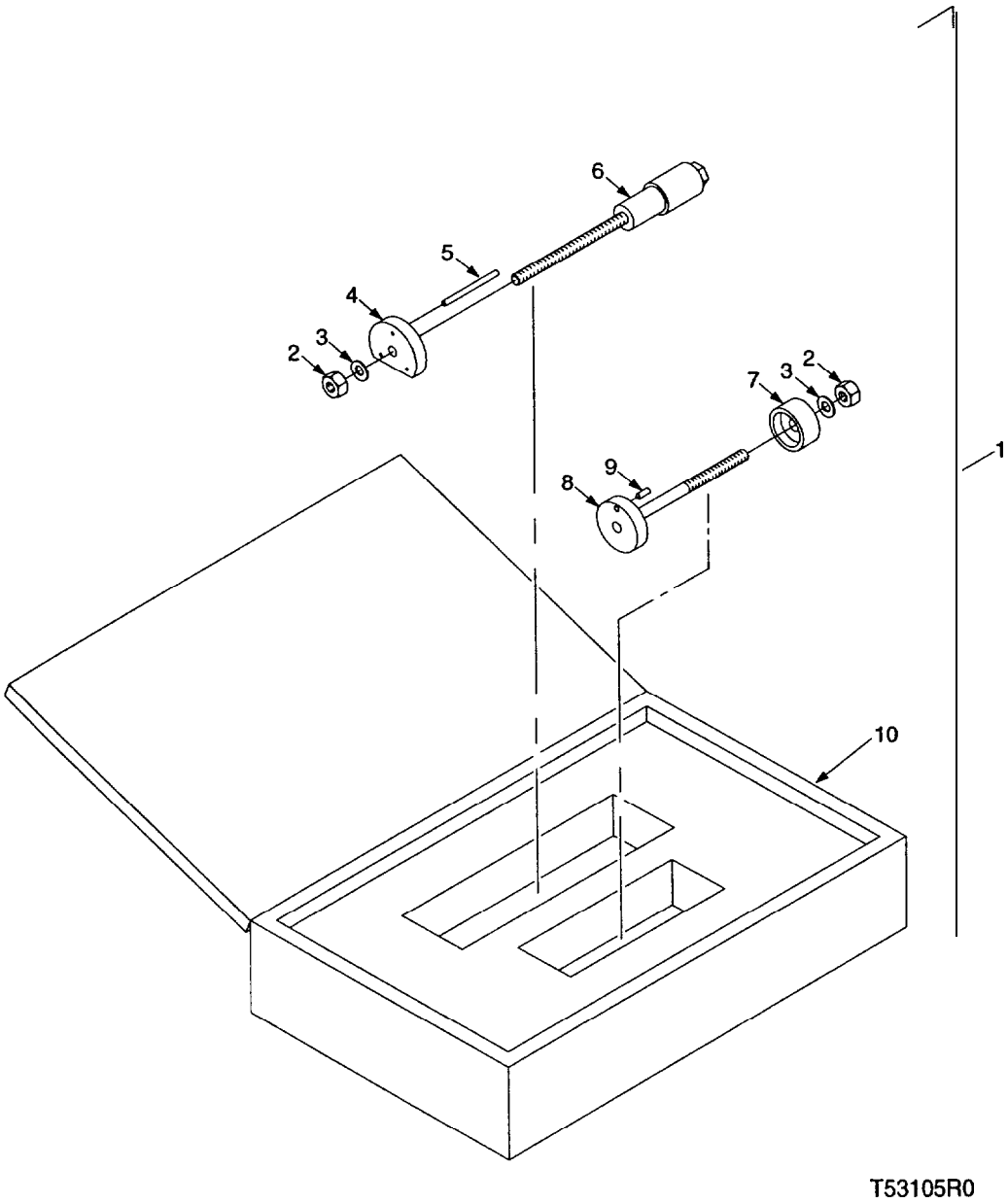

FIGURE 74B. BEVEL GEAR/DUPLEX BEARING ASSEMBLY/DISASSEMBLY KIT (LTCT30741-01)

(1) ITEM NO.	(2) SMR CODE	(3) NSN	(4) CAGEC	(5) PART NUMBER	(6) DESCRIPTION AND USABLE ON CODE (UOC)	(7) QTY
					GROUP 8100 SPECIAL TOOLS (REPAIR PARTS)	
					FIG. 74B BEVEL GEAR/DUPLEX BEARING ASSEMBLY/DISASSEMBLY KIT (LTCT30741–01)	
1	PFDZZ		06848	LTCT30741–01	ASSEMBLY/DISASSEMBLY KIT, BEVEL GEAR/DUPLEX BEARING	1
2	XDDZZ		96906	MS9356-11	.NUT, HEX, CRES	2
3	XDDZZ		96906	MS15795-812	.WASHER, FLAT	2
4	XDDZZ		06848	LTCT30741-06	.PLATE	1
5	XDDZZ		06848	LTCT30741-07	.PIN	3
6	XDDZZ		06848	LTCT30741-10	.BOLT	1
7	XDDZZ		06848	LTCT30741-11	.PLATE	1
8	XDDZZ		06848	LTCT30741-08	.BOLT	1
9	XDDZZ		96906	MS15795-815	.PIN, DOWEL	1
10	XDDZZ		29697	MD1D-6X9X6	.CASE, STORAGE	1

END OF FIGURE

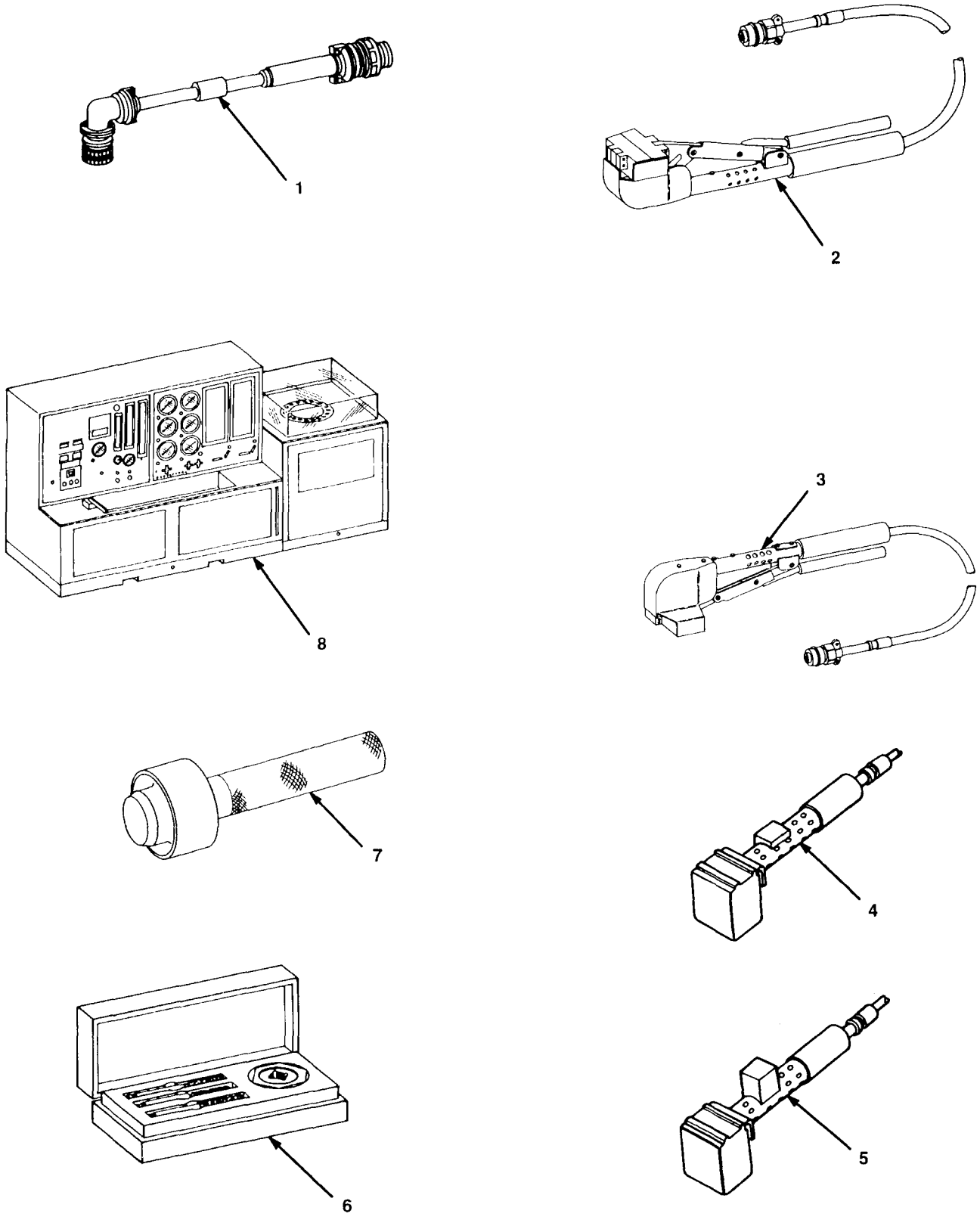

FIGURE 75. SPECIAL TOOLS

(1) ITEM NO	(2) SMR CODE	(3) NSN	(4) CAGEC	(5) PART NUMBER	(6) DESCRIPTION AND USABLE ON CODE (UOC)	(7) QTY
					GROUP 8100 SPECIAL TOOLS LIST	
					FIG. 75 SPECIAL TOOLS	
1	PBFZZ	4920-00-714-1317	98869	BH4352	CABLE ASSY,SPECIAL POI:1 PER 1-50 END ITEMS	
2	PAOLL	6685-00-235-4594	98869	BH7434L40	PROBE ASSEMBLY,THER SEE SECTION 2 FIG. 64 FOR BREAKDOWN BOI:3 PER 10-25 END ITEMS	
3	PAOLL	6685-00-235-4593	98869	BH7434R40	PROBE ASSEMBLY,THER SEE SECTION 2 FIG. 65 FOR BREAKDOWN BOI:3 PER 10-25 END ITEMS	
4	PAOZZ	4920-01-106-9685	98869	BH7454AH-40	HEAT PROBE,WIRING H BOI:1 PER 10-25 END ITEMS UOC:EZP	
5	PAOZZ	4920-01-106-9686	98869	BH7454BH-40	HEAT PROBE,WIRING H BOI:1 PER 10-25 END ITEMS UOC:EZP	
6	XDOZZ		26232	HJB1	DIE AND TAP SET,THR BOI:1 PER 10-25 END ITEMS	
7	PBOZZ	4920-00-776-7126	91547	LTCT100	INSTALLATION TOOL,S BOI:1 PER 10-25 END ITEMS	
8	PFDDD	4920-00-054-0979	91547	LTCT10175-01	TEST STAND,FUEL BOI:1 PER 1-75 END ITEMS	
					END OF FIGURE	

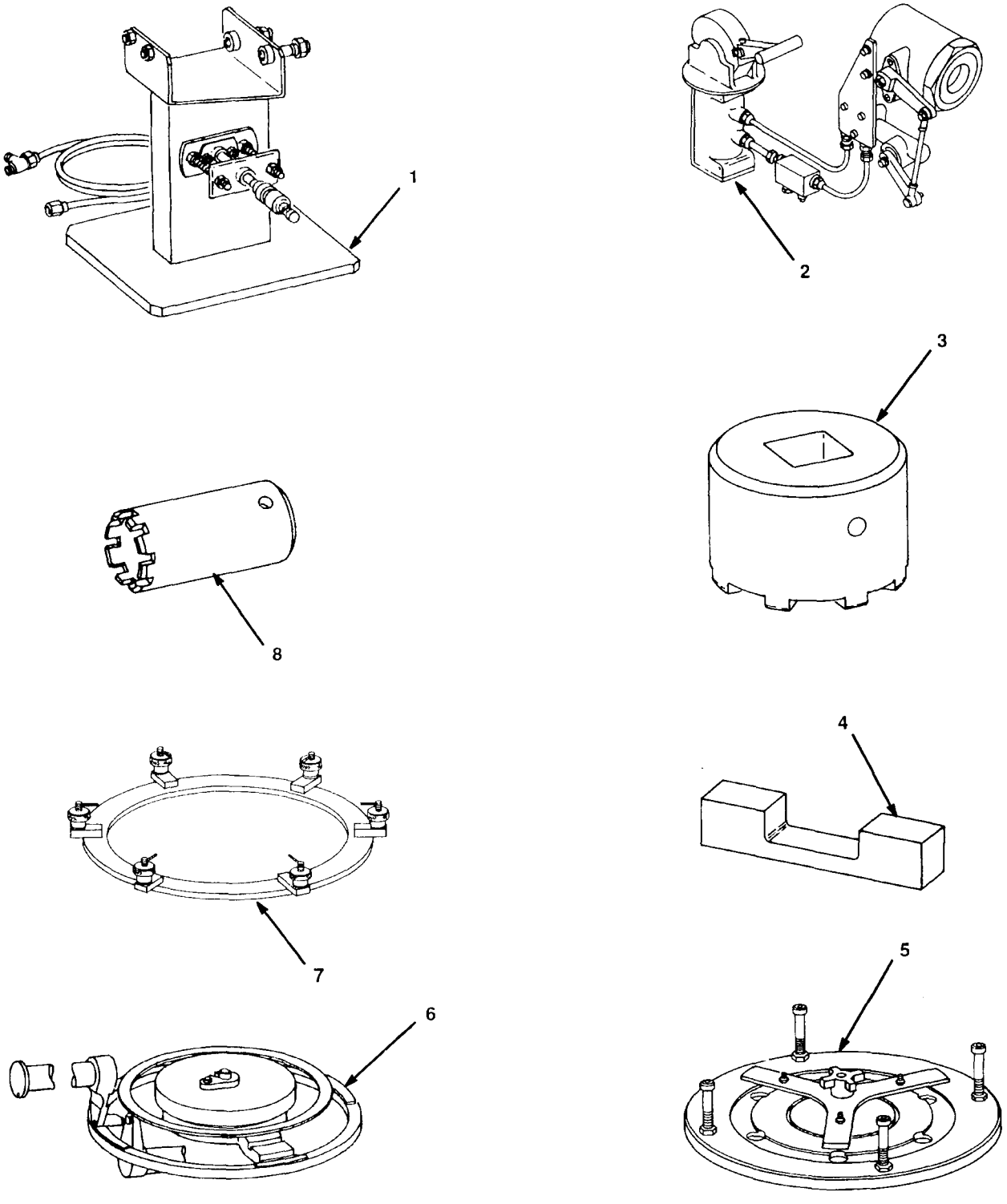

FIGURE 76. SPECIAL TOOLS

(1) ITEM NO	(2) SMR CODE	(3) NSN	(4) CAGEC	(5) PART NUMBER	(6) DESCRIPTION AND USABLE ON CODE (UOC)	(7) QTY
					GROUP 8100 SPECIAL TOOLS LIST	
					FIG. 76 SPECIAL TOOLS	
1	PFDZZ	4920-00-484-3952	91547	LTCT10440-01	FIXTURE,TEST,ACTUAT BOI:1 PER 1-75 END ITEMS	
2	PFDZZ	4920-00-954-8961	91547	LTCT10522-01	CONTROL,WATERBRAKE BOI:1 PER 1-75 END ITEMS	
3	PBFZZ	5120-00-839-0783	91547	LTCT107	SOCKET,WRENCH,FACE BOI:1 PER 1-50 END ITEMS	
4	PFDZZ	5120-00-716-5581	91547	LTCT108	INSTALLATION TOOL BOI:1 PER 1-75 END ITEMS	
5	PFDZZ	4920-00-135-4630	91547	LTCT11043	FIXTURE,HOLDING,TUR BOI:1 PER 1-75 END ITEMS UOC:EZL	
6	PFDZZ	4920-00-102-8546	91547	LTCT11049	FIXTURE,ASSEMBLING, BOI:1 PER 1-75 END ITEMS UOC:EZL	
7	[FDZZ	4920-00-253-1706	91547	LTCT11069	FIXTURE,HOLDING,BRA BOI:1 PER 1-75 END ITEMS UOC:EZL	
8	PBFZZ	5120-00-053-2603	91547	LTCT1109	SOCKET,WRENCH,FACE BOI:1 PER 1-50 END ITEMS	
					END OF FIGURE	

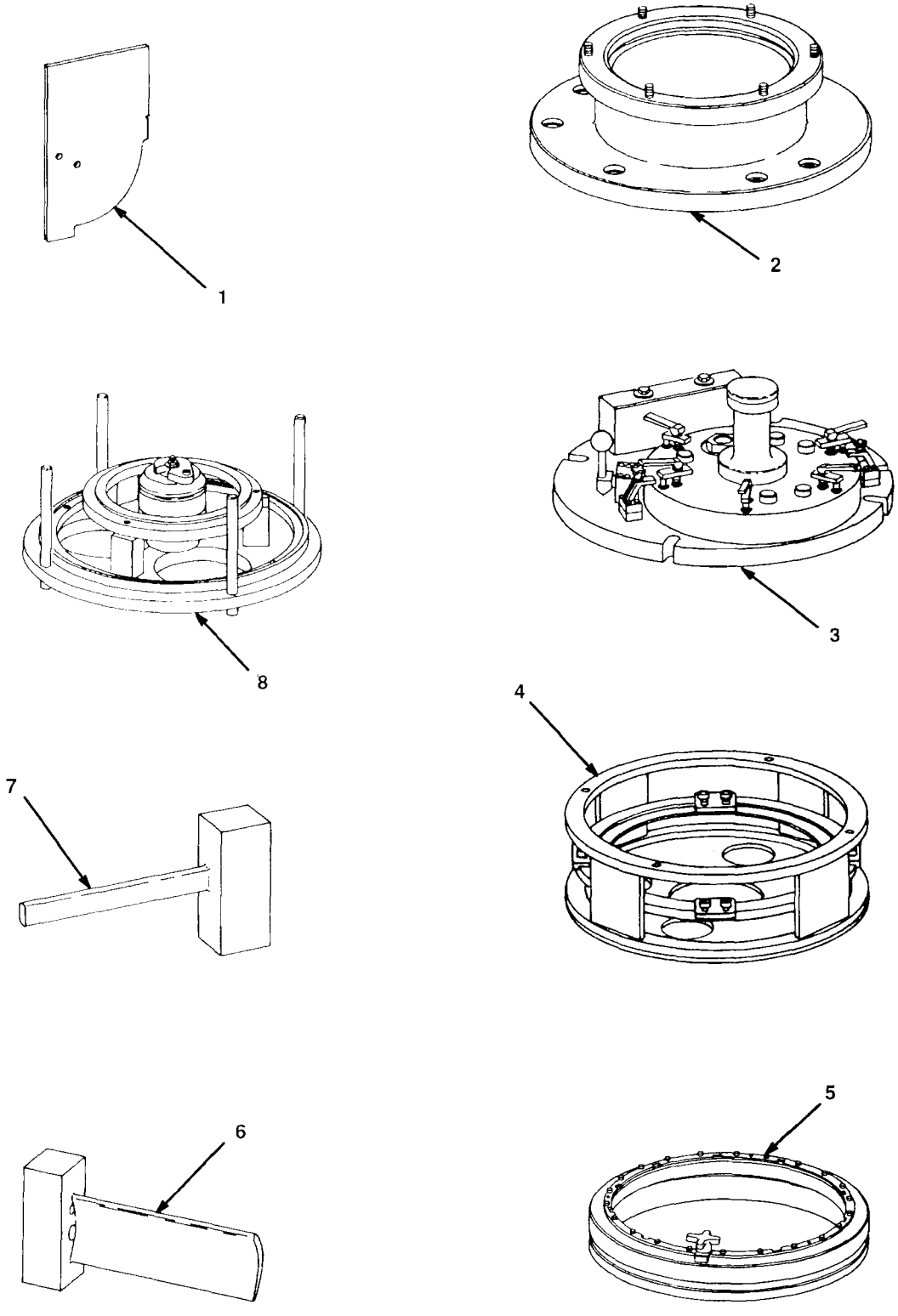

FIGURE 77. SPECIAL TOOLS

(1) ITEM NO	(2) SMR CODE	(3) NSN	(4) CAGEC	(5) PART NUMBER	(6) DESCRIPTION AND USABLE ON CODE (UOC)	(7) QTY
					GROUP 8100 SPECIAL TOOLS LIST	
					FIG. 77 SPECIAL TOOLS	
1	XDDZZ		91547	LTCT11175	TEMPLATE,HINGE BUTT BOI:1 PER 1-75 END ITEMS	
2	PFDZZ	4920-00-106-0074	91547	LTCT11176	FIXTURE,LOCATING BOI:1 PER 1-75 END ITEMS	
3	XBDZZ		91547	LTCT11201	FIXTURE,GRINDING,BE BOI:1 PER 1-75 END ITEMS	
4	PBFZZ	3415-00-134-8128	91547	LTCT11209	FIXTURE,GRINDING AN BOI:1 PER 1-50 END ITEMS	
5	PFDZZ	4920-00-119-1077	91547	LTCT11222	FIXTURE,MACHINING,A BOI:1 PER 1-75 END ITEMS	
6	XDZZ		91547	LTCT11274	ELECTRODE,SHROVD BOI:1 PER 1-75 END ITEMS	
7	PFDZZ	3465-00-221-4975	91547	LTCT11275	TEMPLATE,VANE BOI:1 PER 1-75 END ITEMS	
8	XDZZ		91547	LTCT11276	FIXTURE,HOLDING,RIN BOI:1 PER 1-75 END ITEMS	
					END OF FIGURE	

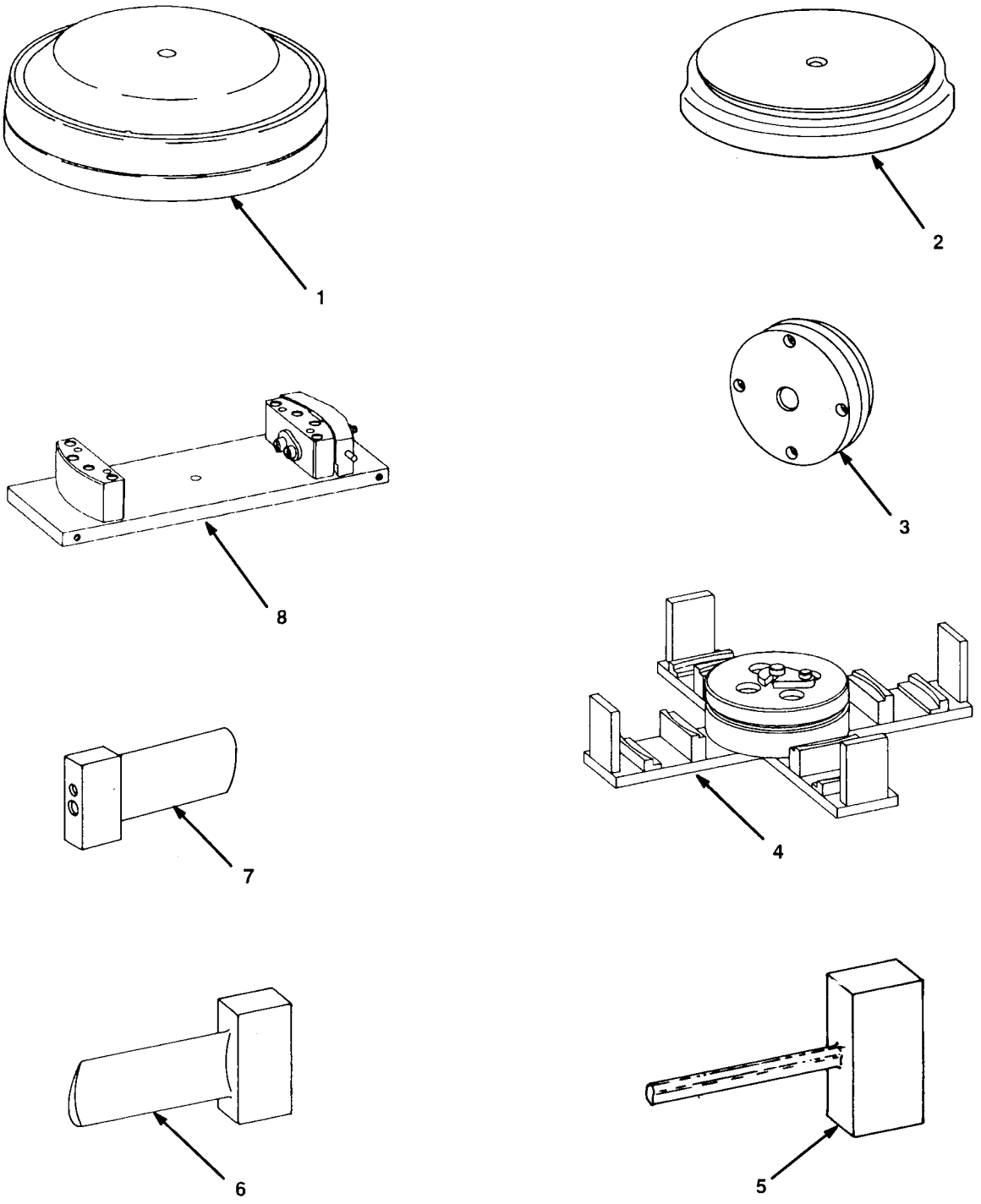

FIGURE 78. SPECIAL TOOLS

(1) ITEM NO	(2) SMR CODE	(3) NSN	(4) CAGEC	(5) PART NUMBER	(6) DESCRIPTION AND USABLE ON CODE (UOC)	(7) QTY
					GROUP 8100 SPECIAL TOOLS LIST	
					FIG. 78 SPECIAL TOOLS	
1	PFDZZ	4920-00-522-3788	91547	LTCT11295	HOLDER,MAINTENANCE BOI:1 PER 1-75 END ITEMS	
1	PFDZZ	4920-00-522-3797	91547	LTCT11296	HOLDER,MAINTENANCE BOI:1 PER 1-75 END ITEMS	
2	XDDZZ		91547	LTCT11315	FIXTURE,NOZZLE SUPP BOI:1 PER 1-75 END ITEMS	
3	PFDZZ	4920-00-176-8421	91547	LTCT11320	FIXTURE,HOLDING,NOZ BOI:1 PER 1-75 END ITEMS	
4	PFDZZ	4920-00-176-8410	91547	LTCT11321	FIXTURE,TURBINE,NOZ BOI:1 PER 1-75 END ITEMS	
5	XDDZZ		91547	LTCT11322	ELECTRODE,SHROUD BOI:1 PER 1-75 END ITEMS	
6	XDDZZ		91547	LTCT11323	ELECTRODE,SHROUD BOI:1 PER 1-75 END ITEMS	
7	PFDZZ	3465-00-181-2745	91547	LTCT11327	TEMPLET,ELECTRODE,S BOI:1 PER 1-75 END ITEMS	
8	PFDZZ	3465-00-243-3662	91547	LTCT11329	DRILL JIG,FIRESHIEL BOI:1 PER 1-75 END ITEMS UOC:EZL	
					END OF FIGURE	

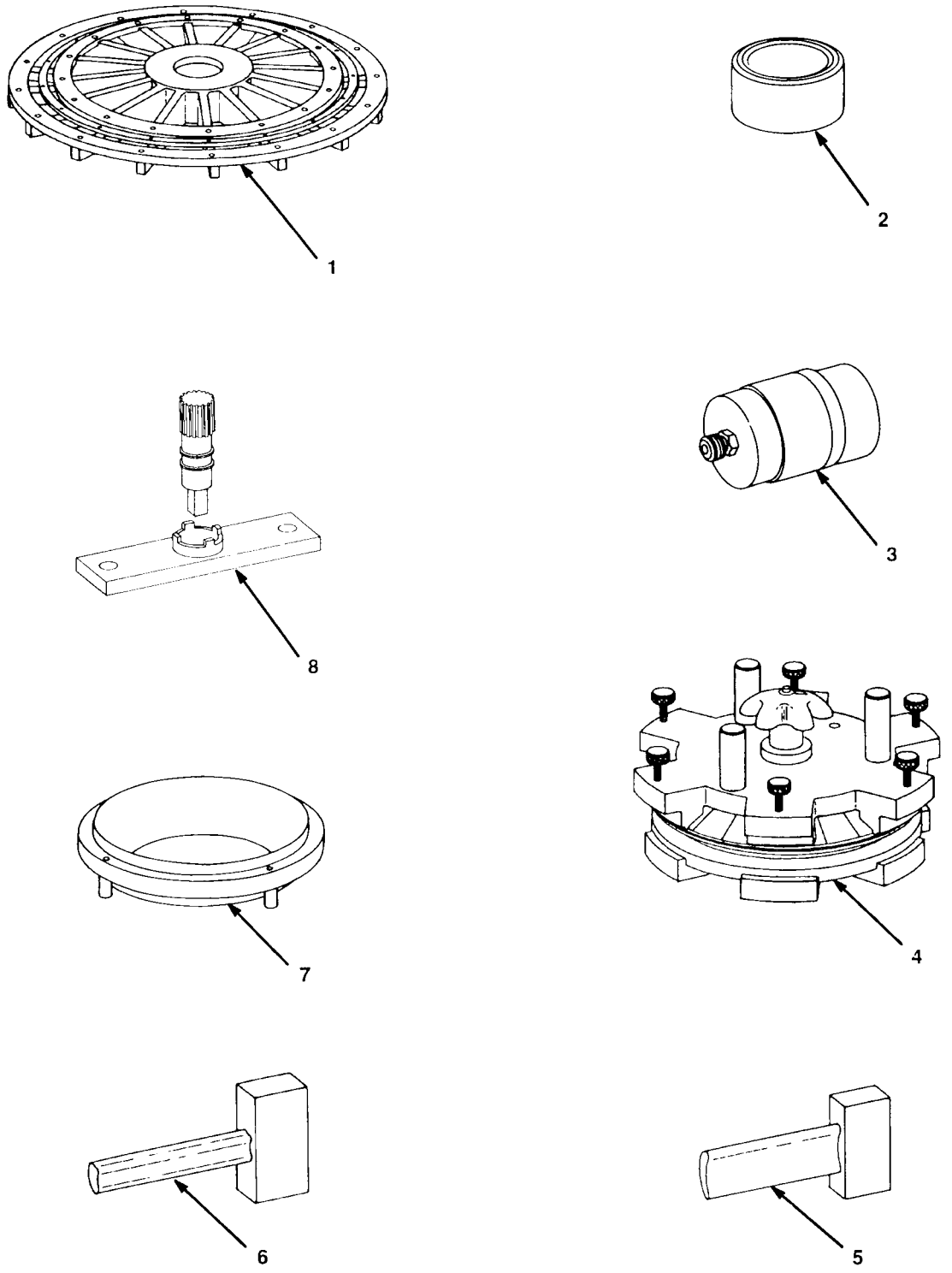

FIGURE 79. SPECIAL TOOLS

(1) ITEM NO	(2) SMR CODE	(3) NSN	(4) CAGEC	(5) PART NUMBER	(6) DESCRIPTION AND USABLE ON CODE (UOC)	(7) QTY
					GROUP 8100 SPECIAL TOOLS LIST	
					FIG. 79 SPECIAL TOOLS	
1	XDDZZ		91547	LTCT11330	FIXTURE,REWORK BOI:1 PER 1-75 END ITEMS UOC:EZL	
2	PFDZZ	5220-00-481-3114	91547	LTCT11338	GAGE,SPECIAL CLEARA BOI:1 PER 1-75 END ITEMS	
3	PBDZZ	4920-00-403-7786	91547	LTCT11365	FIXTURE,SEAL LEAKAG BOI:1 PER 1-75 END ITEMS	
4	PFDZZ	4920-00-001-9343	91547	LTCT11366	FIXTURE,TACKWELD TU BOI:1 PER 1-75 END ITEMS	
5	PFDZZ	5977-01-009-4932	91547	LTCT11367	ELECTRODE BOI:1 PER 1-75 END ITEMS	
6	PFDZZ	5977-01-021-5086	91547	LTCT11368	ELECTRODE BOI:1 PER 1-75 END ITEMS	
7	PFDZZ	4920-01-040-0978	91547	LTCT11403	ADAPTER ASSEMBLY,CO U/W LTCT3653 CONTOUR GAGE BOI:1 PER 1-75 END ITEMS	
8	PAOZZ	4920-00-716-5486	91547	LTCT115	FIXTURE,HOLDING,GEA BOI:1 PER 10-25 END ITEMS	
					END OF FIGURE	

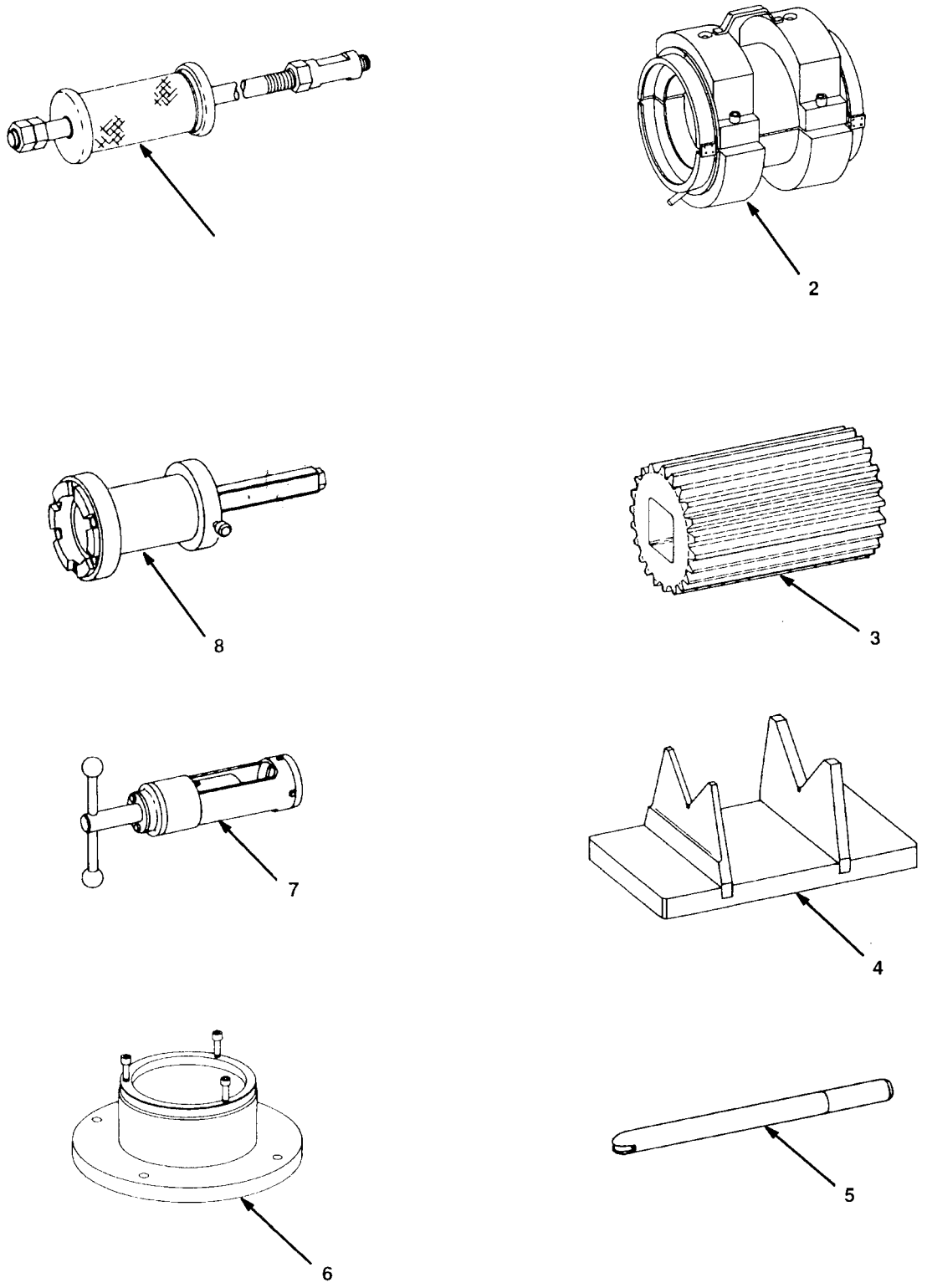

FIGURE 80. SPECIAL TOOLS

(1) ITEM NO	(2) SMR CODE	(3) NSN	(4) CAGEC	(5) PART NUMBER	(6) DESCRIPTION AND USABLE ON CODE (UOC)	(7) QTY
					GROUP 8100 SPECIAL TOOLS LIST	
					FIG. 80 SPECIAL TOOLS	
1	PBOZZ	5120-00-509-2965	91547	LTCT1218	PULLER,MECHANICAL TOOL DOWEL,COMPRESSOR HOUSING BOI:1 PER 1-50 END ITEMS	
2	PFDZZ	4920-00-863-3832	91547	LTCT123	CRADLE ASSEMBLY,TUR BOI:1 PER 1-75 END ITEMS	
3	PBFZZ	4920-00-020-2687	91547	LTCT1255	ADAPTER,ENGINE,ROTA BOI:1 PER 1-50 END ITEMS	
4	PFDZZ	4920-00-402-8424	91547	LTCT13001	STAND,MAINTENANCE,A BOI:1 PER 1-75 END ITEMS	
5	PFDZZ	5120-00-156-8671	91547	LTCT13003	PIN,GUIDE BOI:1 PER 1-75 END ITEMS	
6	XDDZZ		91547	LTCT13007	FIXTURE,GRINDING BOI:1 PER 1-75 END ITEMS	
7	PFFZZ	5120-00-136-4993	91547	LTCT13070	PULLER,MECHANICAL BOI:1 PER 1-50 END ITEMS	
8	PAFZZ	4920-00-495-6592	91547	LTCT13175	FIXTURE,TORQUE WREN BOI:1 PER 1-50 END ITEMS	
					END OF FIGURE	

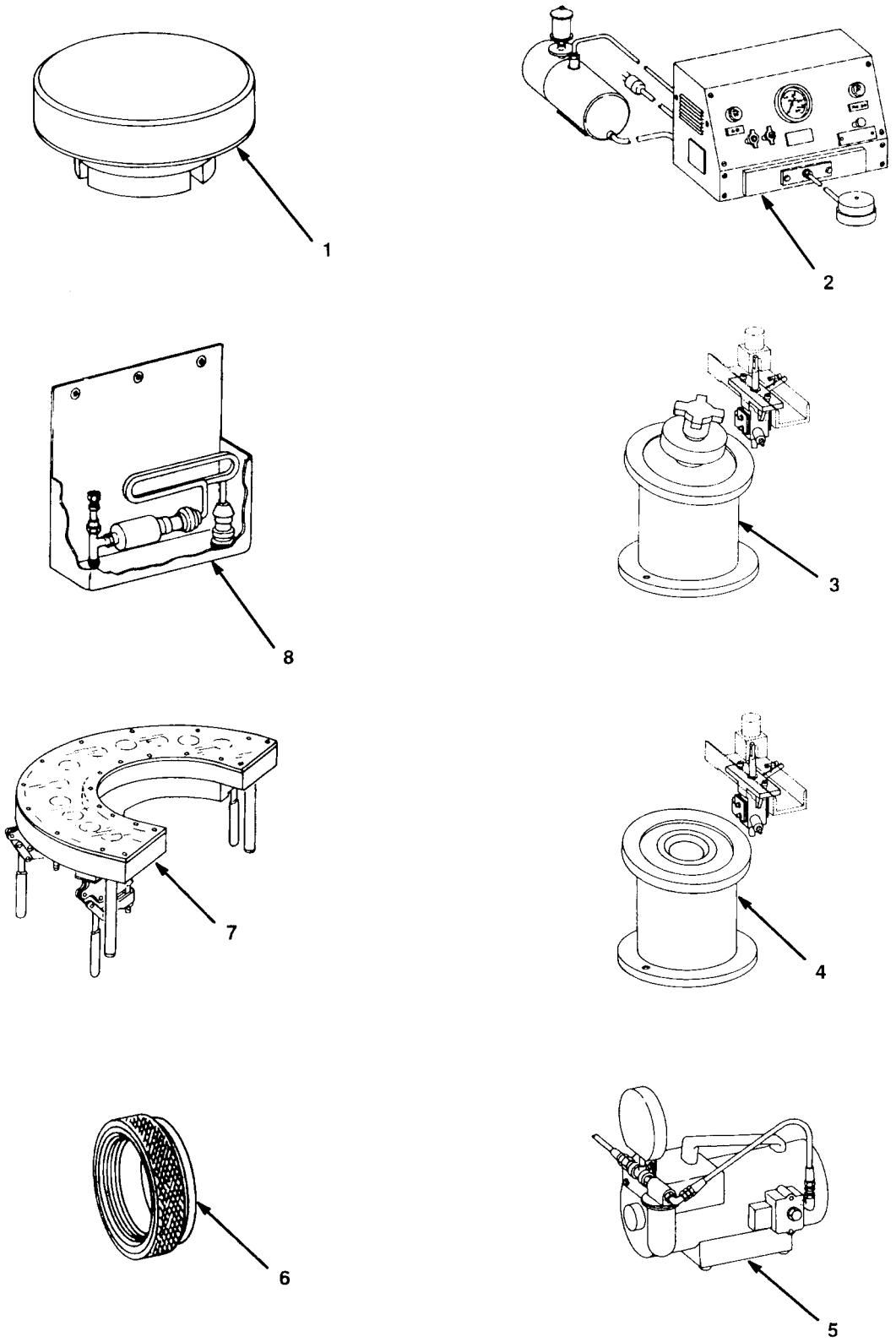

FIGURE 81. SPECIAL TOOLS

(1) ITEM NO	(2) SMR CODE	(3) NSN	(4) CAGEC	(5) PART NUMBER	(6) DESCRIPTION AND USABLE ON CODE (UOC)	(7) QTY
					GROUP 8100 SPECIAL TOOLS LIST	
					FIG. 81 SPECIAL TOOLS	
1	XDDZZ		91547	LTCT13205	PLUG ASSEMBLY,SEAL BOI:1 PER 1-75 END ITEMS	
2	PFDZZ	4920-00-253-1705	91547	LTCT13206	FIXTURE,TEST,SEAL BOI:1 PER 1-75 END ITEMS	
3	PFDZZ	4920-00-252-2726	91547	LTCT13345	PUNCH AND TABLE AIR BOI:1 PER 1-75 END ITEMS	
3	PFDZZ	4920-00-252-2636	91547	LTCT13356	PUNCH AND TABLE ASS BOI:1 PER 1-75 END ITEMS	
4	PFFDD	4920-00-252-2727	91547	LTCT13367	PUNCH AND TABLE ASS BOI:1 PER 1-75 END ITEMS	
5	PFDZZ	4920-00-444-2362	91547	LTCT13606-01	TESTER,SEAL LEAKAGE BOI:1 PER 1-75 END ITEMS	
6	PBFZZ	5120-00-409-9122	91547	LTCT13676	ADAPTER,CONE REMOVA BOI:1 PER 1-50 END ITEMS	
7	XDDZZ		91547	LTCT13688	FIXTURE,HOLDING,NOZ BOI:1 PER 1-75 END ITEMS	
8	PBOFF	4920-00-078-2410	91547	LTCT13726	MAINTENANCE KIT,AIR SEE SECTION 2 FIG. 66 FOR BREAKDOWN BOI:1 PER 10-25 END ITEMS	
					END OF FIGURE	

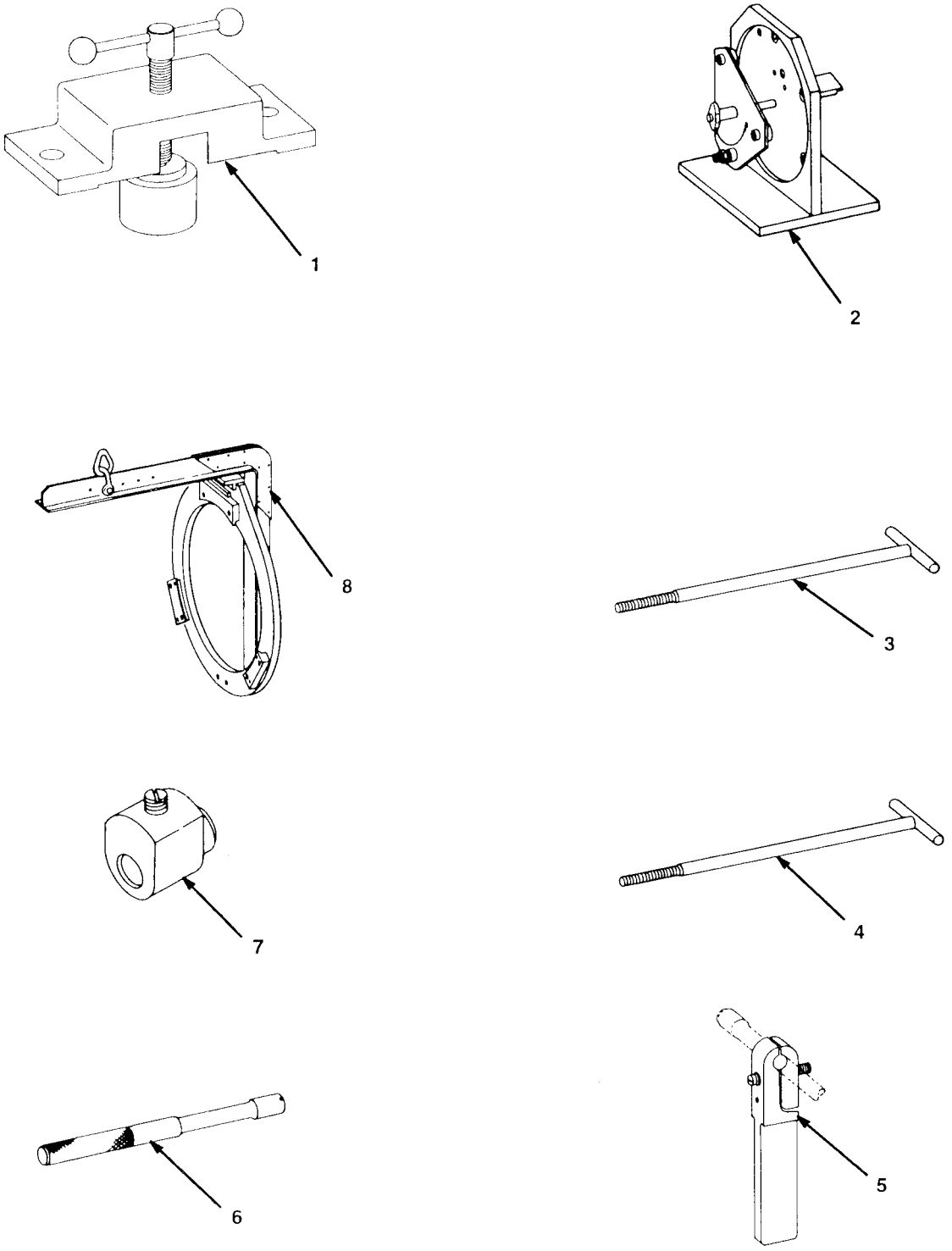

FIGURE 82. SPECIAL TOOLS

(1) ITEM NO	(2) SMR CODE	(3) NSN	(4) CAGEC	(5) PART NUMBER	(6) DESCRIPTION AND USABLE ON CODE (UOC)	(7) QTY
					GROUP 8100 SPECIAL TOOLS LIST	
					FIG. 82 SPECIAL TOOLS	
1	PFDZZ	5120-00-716-5479	91547	LTCT142	PULLER,MECHANICAL BOI:1 PER 1-75 END ITEMS	
2	XDDZZ		91547	LTCT14240	FIXTURE,HOLDING BOI:1 PER 1-75 END ITEMS	
3	PAFZZ	5120-00-959-7634	91547	LTCT1429	HANDLING TOOL,DETEN BOI:1 PER 1-50 END ITEMS	
4	PAOZZ	5120-00-959-7635	91547	LTCT1430	HANDLING TOOL,DETEN BOI:1 PER 10-25 END ITEMS	
5	PBFZZ	4920-01-020-1689	91547	LTCT14503	CLAMP,GAGE BOI:1 PER 1-50 END ITEMS	
6	PBDZZ	5120-01-020-1690	91547	LTCT14514	STAKING TOOL,LOCKCU BOI:1 PER 1-75 END ITEMS	
7	PBFZZ	4920-01-042-9970	91547	LTCT14593-01	STOP ASSEMBLY BOI:1 PER 1-50 END ITEMS UOC:EZP	
8	PAOZZ	1730-01-139-1281	91547	LTCT14668-01	SLING,AIRCRAFT MAIN BOI:1 PER 1-25 END ITEMS	
					END OF FIGURE	

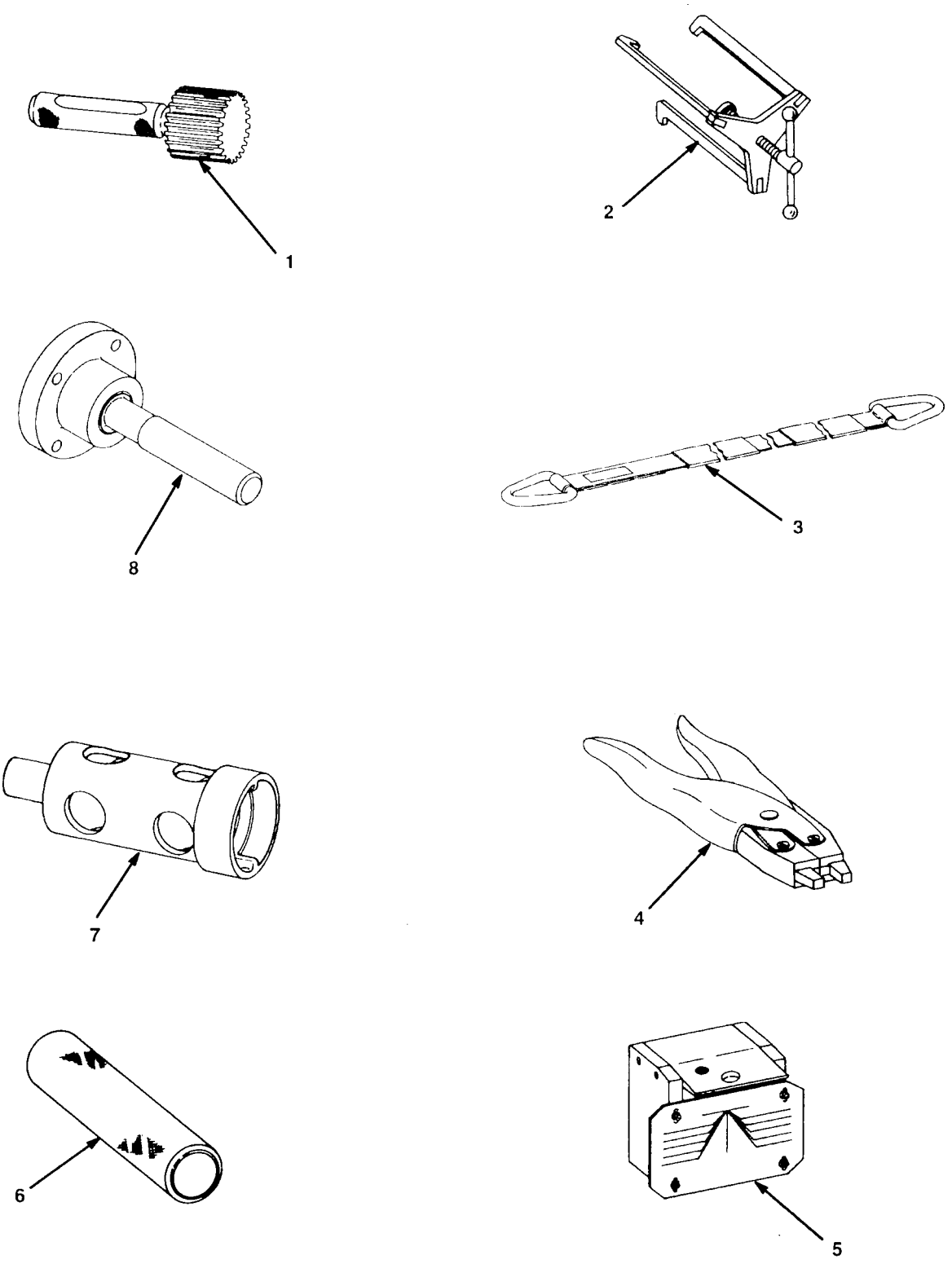

FIGURE 83. SPECIAL TOOLS

(1) ITEM NO	(2) SMR CODE	(3) NSN	(4) CAGEC	(5) PART NUMBER	(6) DESCRIPTION AND USABLE ON CODE (UOC)	(7) QTY
					GROUP 8100 SPECIAL TOOLS LIST	
					FIG. 83 SPECIAL TOOLS	
1	PBFZZ	5220-01-138-6971	91547	LTCT14679	GAGE,PLUG,SPLINE BOI:1 PER 1-50 END ITEMS	
2	PFDZZ	5120-01-042-5477	91547	LTCT14716-01	PULLER,MECHANICAL BOI:1 PER 1-75 END ITEMS	
3	PBFZZ	1730-01-139-4717	91547	LTCT14721	SLING,AIRCRAFT MAIN BOI:1 PER 1-50 END ITEMS	
4	PFDZZ	5120-01-304-3622	91547	LTCT14733	PLIERS BOI:1 PER 1-75 END ITEMS	
5	XBDZZ		91547	LTCT14753	FIXTURE BOI:1 PER 1-75 END ITEMS	
6	PFDZZ	5120-01-294-6946	91547	LTCT14773	INSERTER,BEARING AN BOI:1 PER 1-75 END ITEMS	
7	PFDZZ	5120-01-139-4541	91547	LTCT14774-01	CRIMPING TOOL,LOCKI BOI:1 PER 1-75 END ITEMS UOC:EZL	
8	XDDZZ		91547	LTCT14778	TOOL BOI:1 PER 1-75 END ITEMS	
					END OF FIGURE	

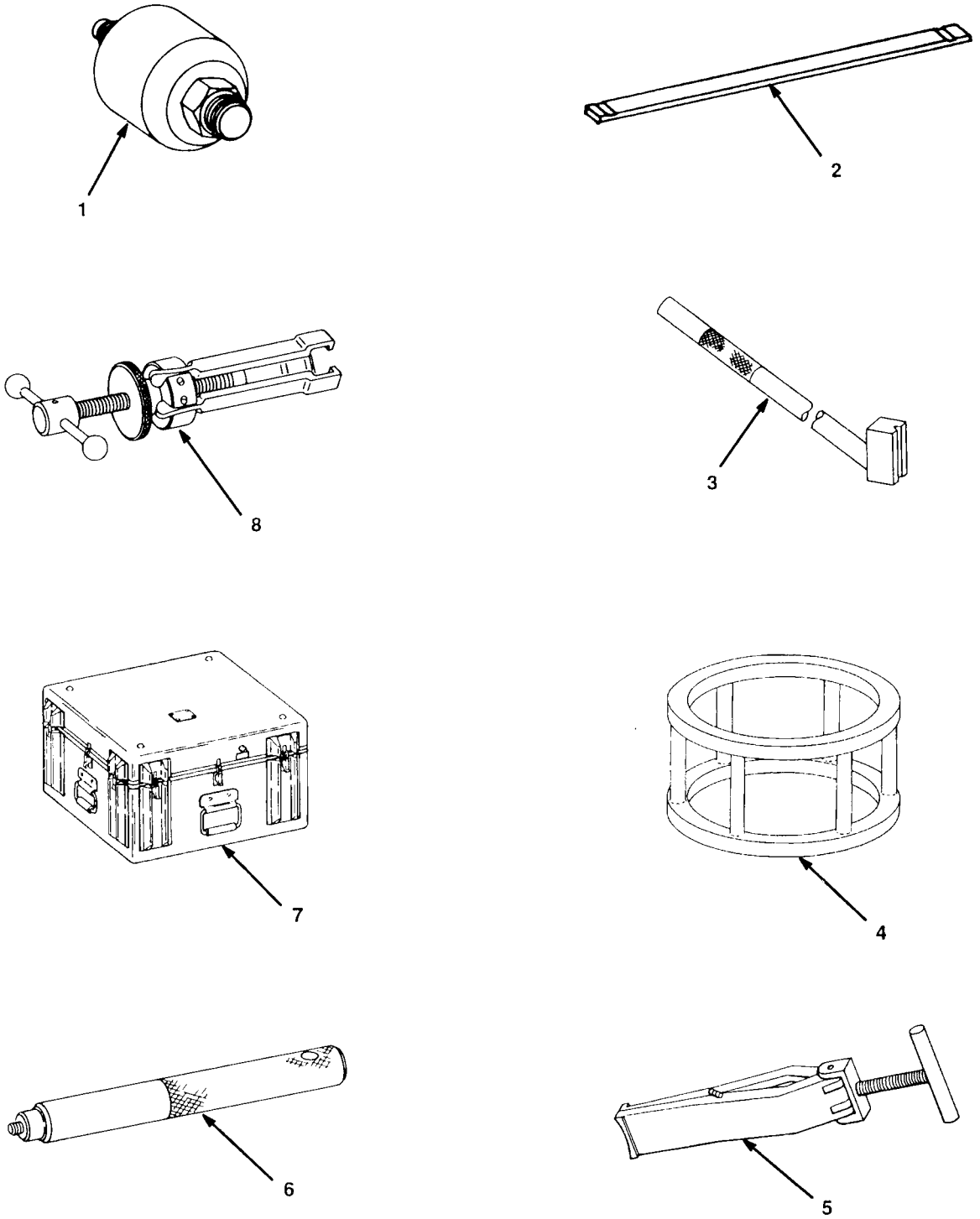

FIGURE 84. SPECIAL TOOLS

(1) ITEM NO	(2) SMR CODE	(3) NSN	(4) CAGEC	(5) PART NUMBER	(6) DESCRIPTION AND USABLE ON CODE (UOC)	(7) QTY
					GROUP 8100 SPECIAL TOOLS LIST	
					FIG. 84 SPECIAL TOOLS	
1	XDOZZ		91547	LTCT14779-01	REMOVING TOOL,SEAL ALTERNATE TO P/N LTCT3640 BOI:1 PER 10-25 END ITEMS	
2	PBOZZ	5120-00-671-2129	91547	LTCT153	BAR,LOCATING BOI:1 PER 1-50 END ITEMS	
3	PBOZZ	4920-00-891-4653	91547	LTCT1643	DRIFT ASSEMBLY,COMP BOI:1 PER 10-25 END ITEMS	
3	PBOZZ	4920-00-898-7925	91547	LTCT1644	TOOL,INSTALLING AND BLADES BOI:1 PER 1-50 END ITEMS	
4	PAFZZ	4920-00-871-5133	91547	LTCT179	THRUST BEARING REMO BOI:1 PER 1-50 END ITEMS	
5	PFDZZ	4920-00-864-3466	91547	LTCT197	SEPARATOR TOOL,COMP BOI:1 PER 1-75 END ITEMS	
6	XDDZZ		91547	LTCT2003	PLUG ASSEMBLY,INSTA BOI:1 PER 1-75 END ITEMS	
7	XDFFF		91547	LTCT2020-01	MAINTENANCE KIT,FLA FINISHING,FIRST STAGE FOR TURBINE FOR INITIAL DISTRIBUTION ONLY,REQUISITION INDIVIDUAL COMPONENTS TO REPLENISH MAINTENANCE KT, SEE SECTION 2 FIG. 67 FOR BREAKDOWN BOI:1 PER 1-50 END ITEMS	
8	PBFZZ	5120-00-804-2629	91547	LTCT2021	PULLER KIT,UNIVERSA BOI:1 PER 1-50 END ITEMS	
					END OF FIGURE	

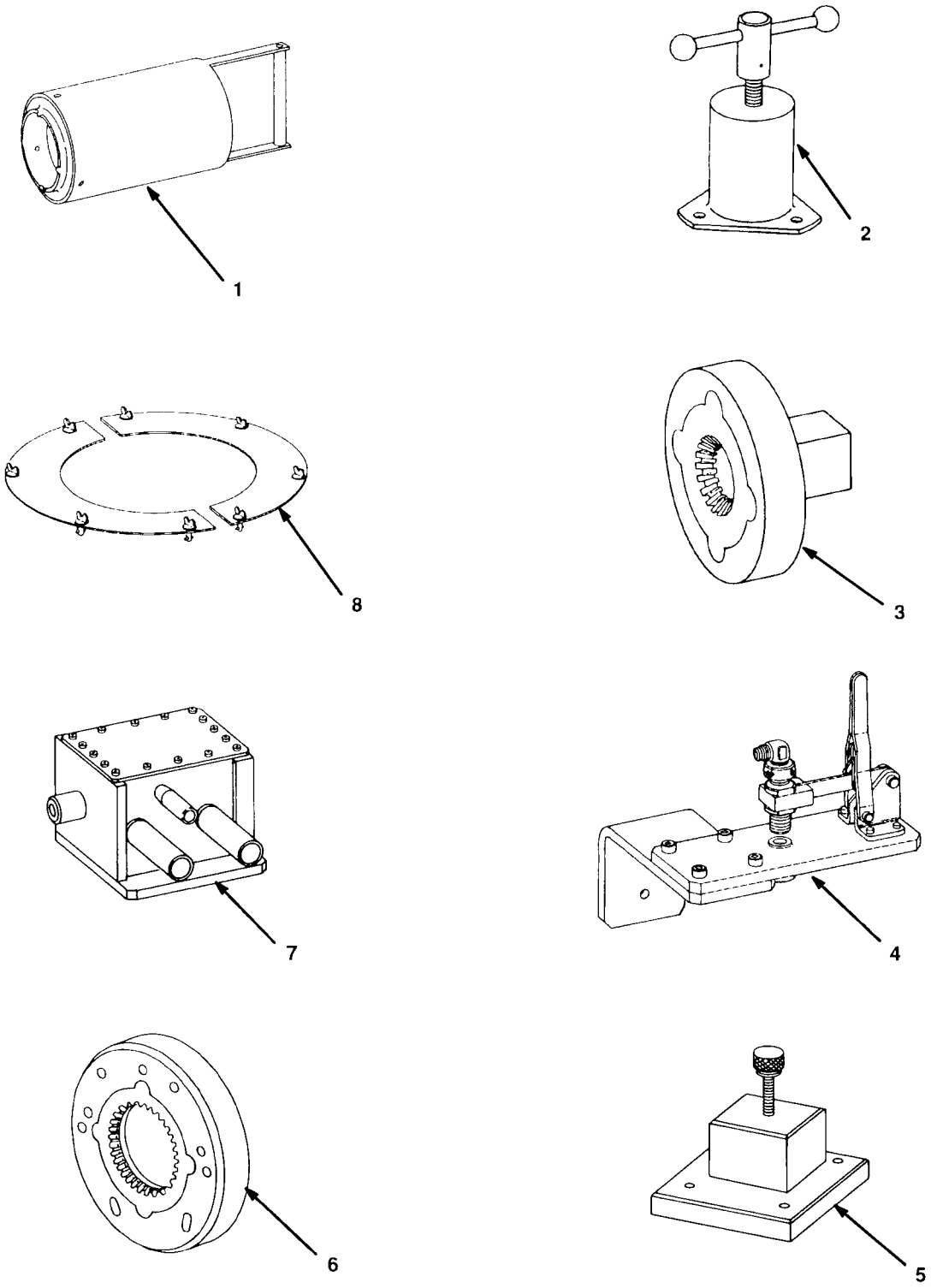

FIGURE 85. SPECIAL TOOLS

(1) ITEM NO	(2) SMR CODE	(3) NSN	(4) CAGEC	(5) PART NUMBER	(6) DESCRIPTION AND USABLE ON CODE (UOC)	(7) QTY
					GROUP 8100 SPECIAL TOOLS LIST	
					FIG. 85 SPECIAL TOOLS	
1	PFDZZ	5120-00-671-4022	91547	LTCT2027	PULLER,MECHANICAL BOI:1 PER 1-75 END ITEMS	
2	PFDZZ	5120-00-757-4910	91547	LTCT2028	PULLER,MECHANICAL GEAR BOI:1 PER 1-75 END ITEMS	
3	PFDZZ	5120-00-909-4210	91547	LTCT2037	HOLDER ASSEMBLY,GEA BOI:1 PER 1-75 END ITEMS	
4	PFDZZ	4920-00-909-2597	91547	LTCT2041	FIXTURE,TEST,FLOW BOI:1 PER 1-75 END ITEMS	
5	PFDZZ	5120-00-906-8056	91547	LTCT2044	HOLDING DEVICE,GEAR BOI:1 PER 1-75 END ITEMS	
6	PFDZZ	4920-00-909-2599	91547	LTCT2048	HOLDER,PINION GEAR BOI:1 PER 1-75 END ITEMS	
7	PFDZZ	4920-00-919-0195	91547	LTCT2052	FIXTURE,AIRCRAFT MA BOI:1 ER 1-75 END ITEMS	
8	PFDZZ	4920-00-919-1349	91547	LTCT2057	PLATE,SPLIT BOI:1 PER 1-75 END ITEMS	
8	PFDZZ	4920-00-919-1348	91547	LTCT2058	PLATE,SPLIT BOI:1 PER 1-75 END ITEMS	
					END OF FIGURE	

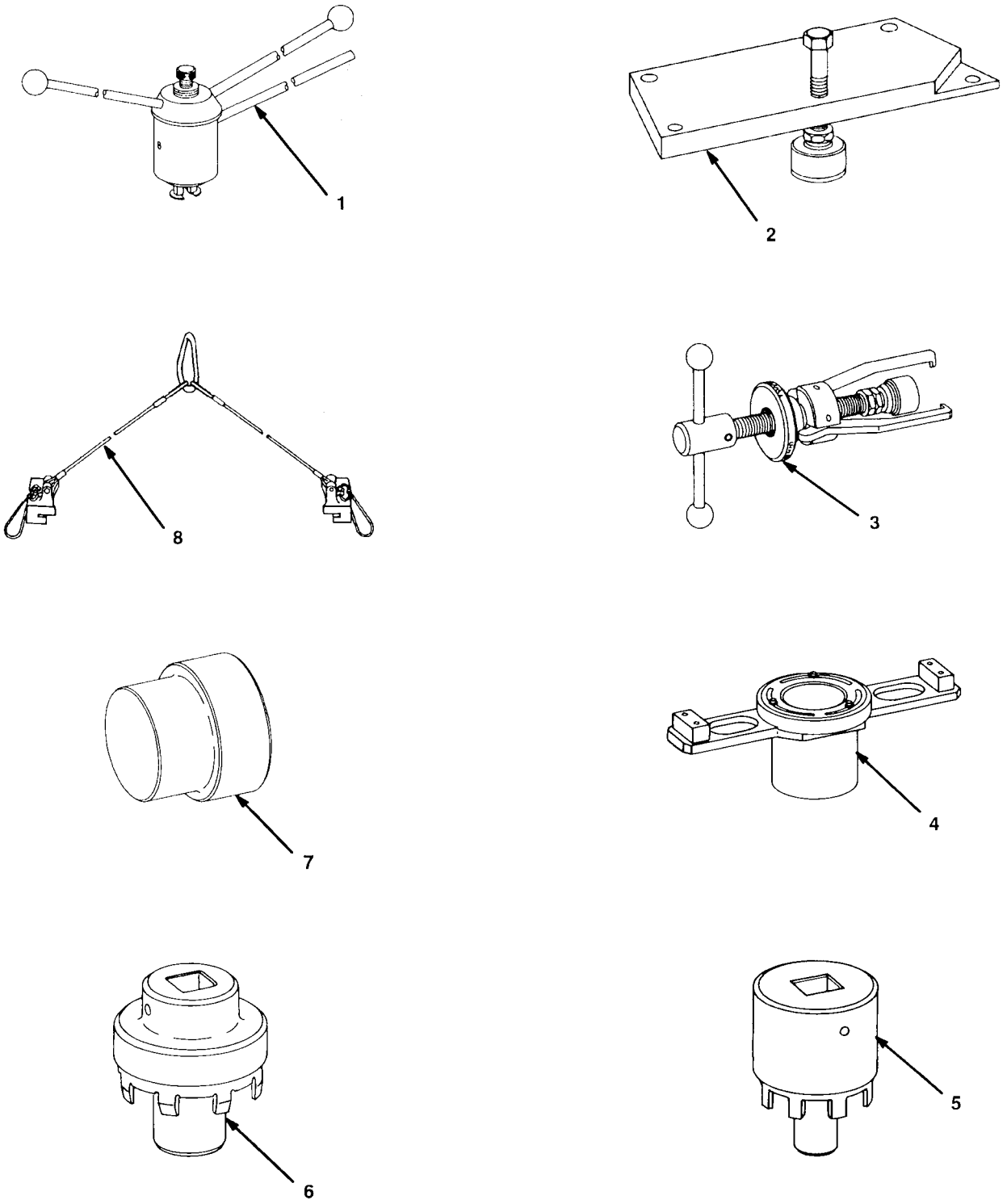

FIGURE 86. SPECIAL TOOLS

(1) ITEM NO	(2) SMR CODE	(3) NSN	(4) CAGEC	(5) PART NUMBER	(6) DESCRIPTION AND USABLE ON CODE (UOC)	(7) QTY
					GROUP 8100 SPECIAL TOOLS LIST	
					FIG. 86 SPECIAL TOOLS	
1	PFDZZ	4920-00-906-9755	91547	LTCT2067	PULLER,SEAL BOI:1 PER 1-75 END ITEMS	
2	PFDZZ	4920-00-816-6838	91547	LTCT207	FIXTURE,TEST,GEAR B BOI:1 PER 1-75-END ITEMS	
3	PFDZZ	5120-00-923-3431	91547	LTCT2073	PULLER,MECHANICAL BOI:1 PER 1-75 END ITEMS	
4	PBFZZ	4920-00-923-2773	91547	LTCT2075	FIXTURE,HOLDING,SUN BOI:1 PER 1-50 END ITEMS	
5	PFDZZ	5120-00-923-3443	91547	LTCT2079	SOCKET,WRENCH,FACE BOI:1 PER 1-75 END ITEMS	
6	PFDZZ	5120-00-923-3449	91547	LTCT2080	SOCKET,WRENCH,FACE BOI:1 PER 1-75 END ITEMS	
7	PFDZZ	5120-00-923-3598	91547	LTCT2086	INSERTER,BEARING AN BUSHING STEEL,W/O HANDLE, W/O DRIVER COLLAR BOI:1 PER 1-75 END ITEMS	
8	PFDZZ	1730-00-903-5020	91547	LTCT2096	SLING,AIRCRAFT MAIN BOI:1 PER 1-75 END ITEMS	
					END OF FIGURE	

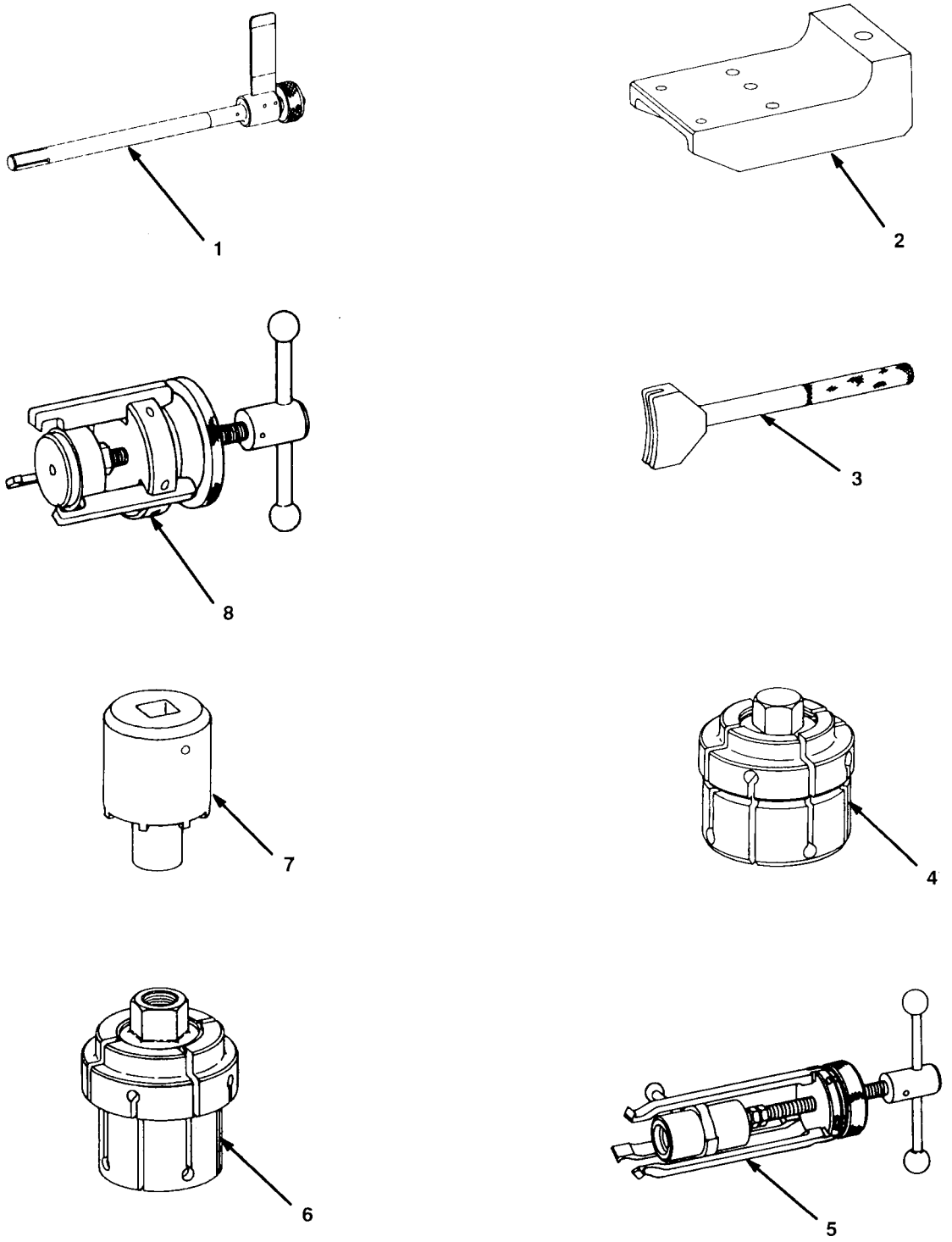

FIGURE 87. SPECIAL TOOLS

(1) ITEM NO	(2) SMR CODE	(3) NSN	(4) CAGEC	(5) PART NUMBER	(6) DESCRIPTION AND USABLE ON CODE (UOC)	(7) QTY
					GROUP 8100 SPECIAL TOOLS LIST	
					FIG. 87 SPECIAL TOOLS	
1	PBFZZ	5220-00-906-3926	91547	LTCT2099	GAGE,BACKLASH BOI:1 PER 1-50 END ITEMS	
2	PBFZZ	4920-00-888-9547	91547	LTCT2112	MOUNTING BRACKET BOI:1 PER 1-50 END ITEMS	
3	PBFZZ	5120-00-849-3984	91547	LTCT2118	TAMPER,HAND BOI:1 PER 1-50-END ITEMS	
3	PBFZZ	4920-00-842-6022	91547	LTCT2119	STRAIGHTENING TOOL, BOI:1 PER 1-50 END ITEMS	
4	PFDZZ	4920-00-842-6038	91547	LTCT2120	COLLET ASSEMBLY,TES BOI:1 PER 1-75 END ITEMS	
5	PBFZZ	5120-00-989-0017	91547	LTCT2121	PULLER,MECHANICAL BOI:1 PER 1-50 END ITEMS	
6	PFDZZ	4920-00-917-7101	91547	LTCT2129	ARBOR ASSY,BALANCIN BOI:1 PER 1-75 END ITEMS	
7	PFDZZ	5120-00-952-7257	91547	LTCT2133	SOCKET,WRENCH,FACE BOI:1 PER 1-75 END ITEMS	
8	PFDZZ	5120-00-923-3454	91547	LTCT2142	PULLER,MECHANICAL BOI:1 PER 1-75 END ITEMS	
					END OF FIGURE	

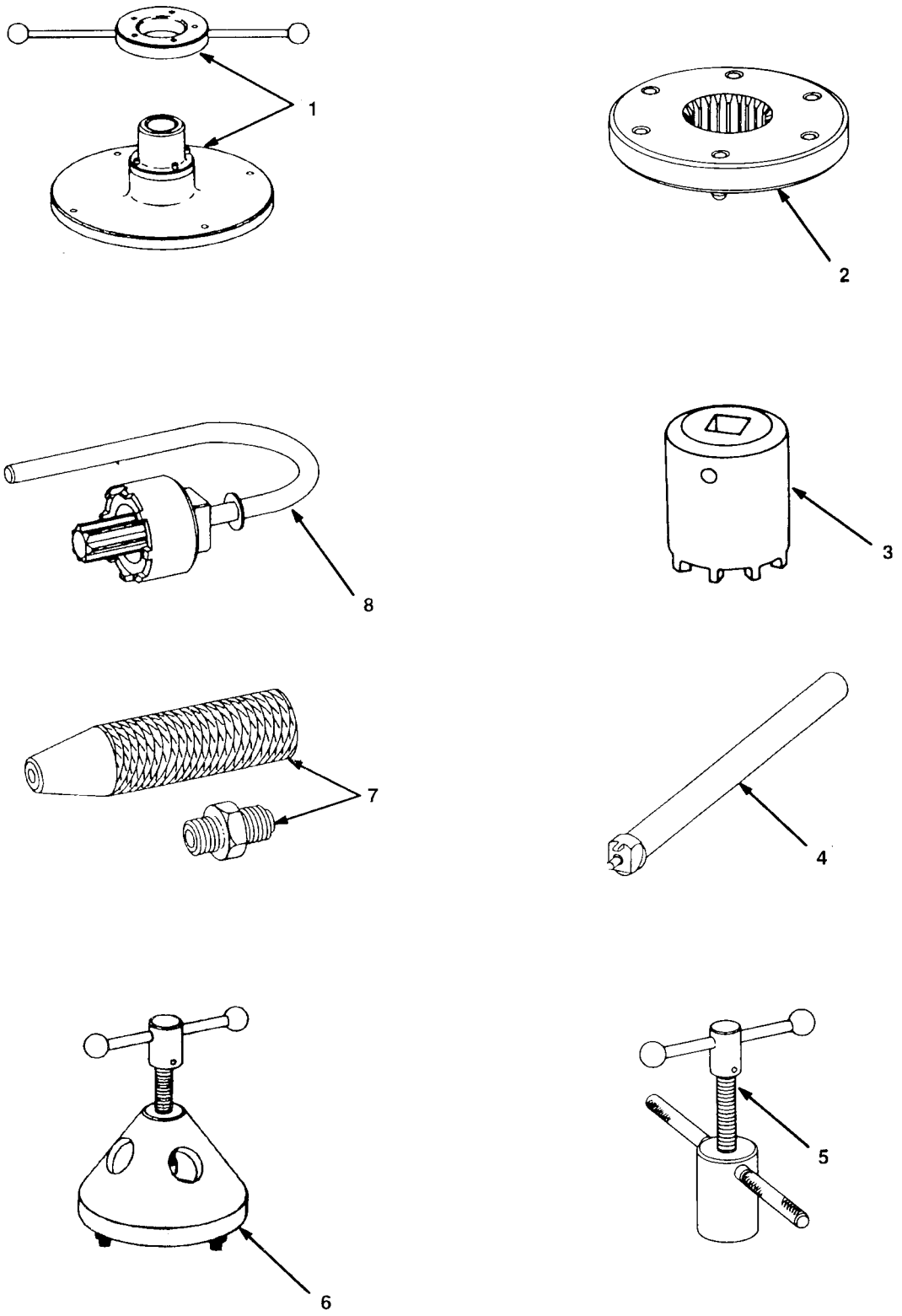

FIGURE 88. SPECIAL TOOLS

(1) ITEM NO	(2) SMR CODE	(3) NSN	(4) CAGEC	(5) PART NUMBER	(6) DESCRIPTION AND USABLE ON CODE (UOC)	(7) QTY
					GROUP 8100 SPECIAL TOOLS LIST	
					FIG. 88 SPECIAL TOOLS	
1	PFDZZ	4920-00-917-9975	91547	LTCT2147-01	WRENCH AND BASE ASS BOI:1 PER 1-75 END ITEMS	
2	XBDZZ		91547	LTCT2149	FIXTURE,HOLDING,WAT BOI:1 PER 1-75 END ITEMS	
3	PAFZZ	5120-00-893-2519	91547	LTCT215	SOCKET,WRENCH,FA BOI:1 PER 1-50 END ITEMS	
4	PFDZZ	5340-00-919-6052	91547	LTCT2151	PLUNGER,DETENT BOI:1 PER 1-75 END ITEMS	
4	PFDZZ	5340-00-919-0190	91547	LTCT2152	PLUNGER,DETENT BOI:1 PER 1-75 END ITEMS	
5	PFDZZ	5120-00-917-9977	91547	LTCT2158-01	PULLER,MECHANICAL BOI:1 PER 1-75 END ITEMS	
6	PFDZZ	5120-00-989-0038	91547	LTCT2159	PULLER,MECHANICAL BOI:1 PER 1-75 END ITEMS	
7	PFDZZ	4920-00-816-6856	91547	LTCT216	FIXTURE,TEST,FILTER BOI:1 PER 1-75 END ITEMS	
8	PFDZZ	5120-00-891-3120	91547	LTCT2161	WRENCH,SPANNER NUT BOI:1 PER 1-75 END ITEMS	
					END OF FIGURE	

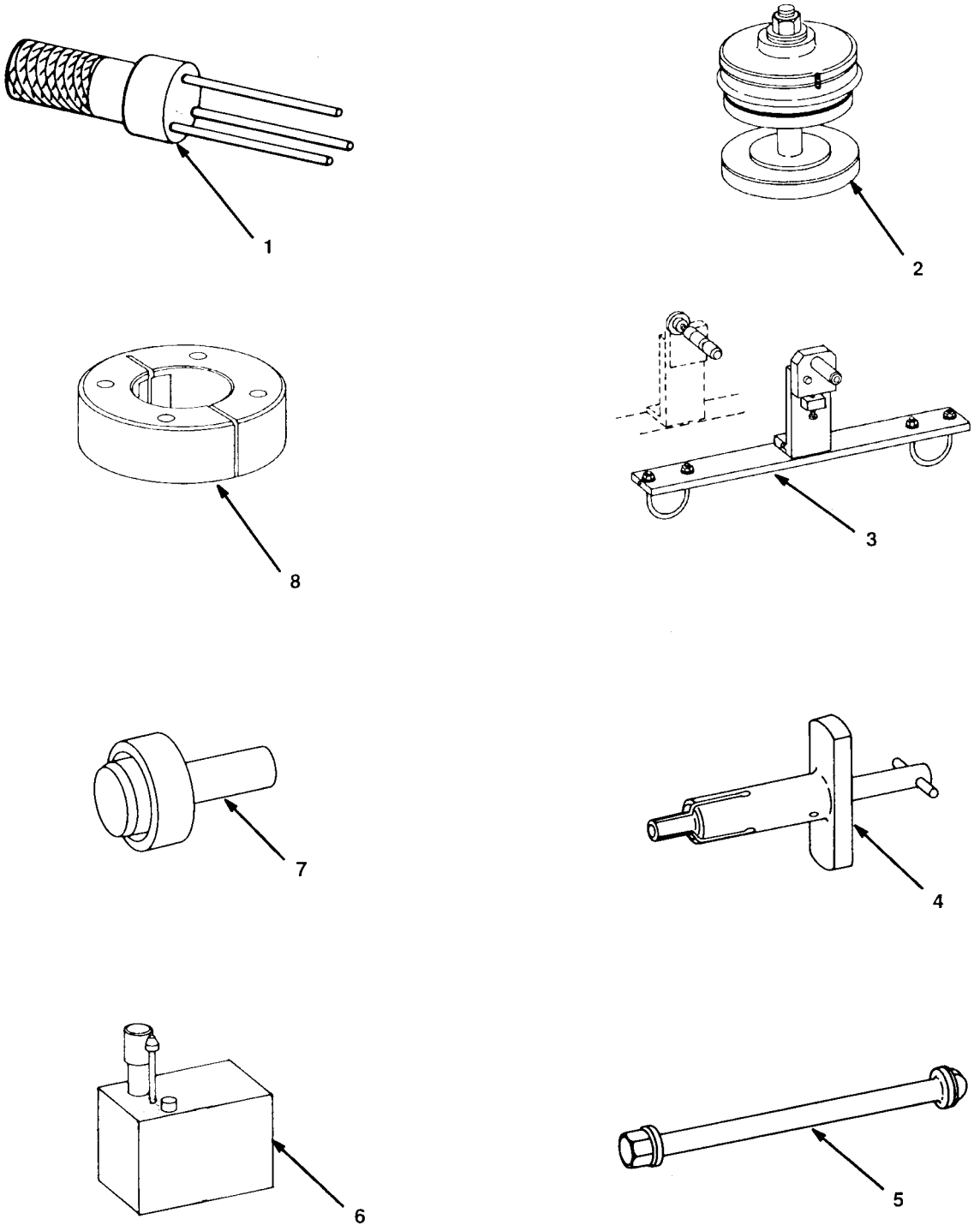

FIGURE 89. SPECIAL TOOLS

(1) ITEM NO	(2) SMR CODE	(3) NSN	(4) CAGEC	(5) PART NUMBER	(6) DESCRIPTION AND USABLE ON CODE (UOC)	(7) QTY
					GROUP 8100 SPECIAL TOOLS LIST	
					FIG. 89 SPECIAL TOOLS	
1	PFDZZ	4920-00-816-6848	91547	LTCT231	PULLER,BEARING BOI:1 PER 1-75 END ITEMS	
2	PFDZZ	4920-00-816-6860	91547	LTCT236	FIXTURE,TEST,PRESSU BOI:1 PER 1-75 END ITEMS	
3	PFDZZ	4920-00-864-3464	91547	LTCT251	FIXTURE,HOLDING,ROT BOI:1 PER 1-75 END ITEMS	
4	PAFZZ	4920-00-816-6871	91547	LTCT256	INSTALLING PIN,TOOL BOI:1 PER 1-50 END ITEMS	
5	PAFZZ	5120-00-778-0661	91547	LTCT258	DRIVER,WRENCH BOI:1 PER 1-50 END ITEMS	
6	PFDZZ	4920-00-940-0346	91547	LTCT26151-01	TEST UNIT,TEMPERATU BOI:1 PER 1-75 END ITEMS	
7	PBOZZ	4920-00-854-4519	91547	LTCT270	TOOL,INSTALLING,SEA BOI:1 PER 10-25 END ITEMS	
8	PFDZZ	3120-00-927-3618	91547	LTCT2712-03	BEARING,SLEEVE BOI:1 PER 1-75 END ITEMS	
8	PFDZZ	3120-00-878-5615	91547	LTCT2712-27	BEARING,SLEEVE BOI:1 PER 1-75 END ITEMS	
8	PFDZZ	3120-00-878-5604	91547	LTCT2712-28	BEARING,SLEEVE BOI:1 PER 1-75 END ITEMS	
8	PFDZZ	3120-00-400-2784	91547	LTCT2712-39	BEARING,SLEEVE BOI:1 PER 1-75 END ITEMS	
8	XBDZZ		91547	LTCT2712-40	BEARING,SLEEVE BOI:1 PER 1-75 END ITEMS	
					END OF FIGURE	

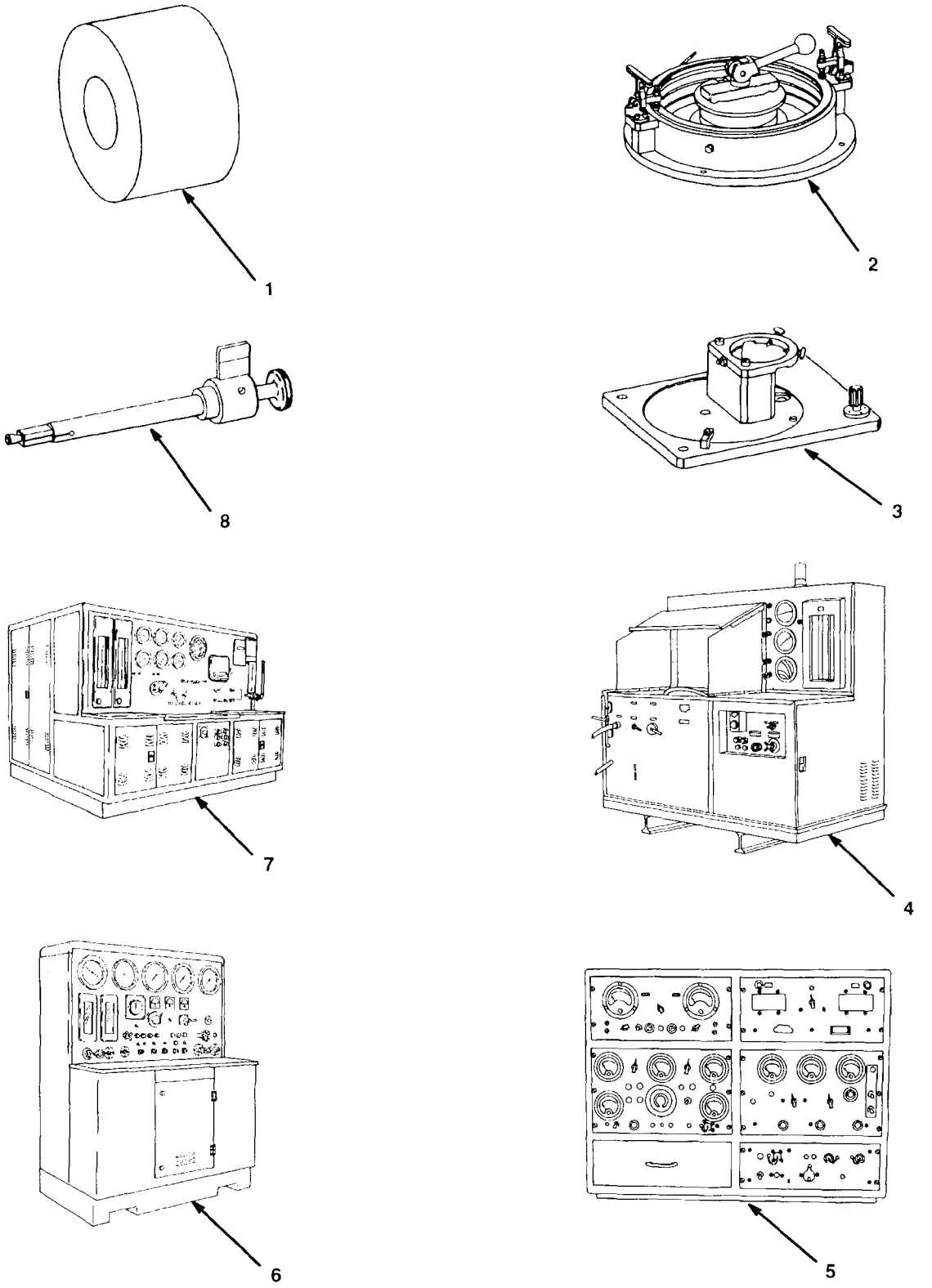

FIGURE 90. SPECIAL TOOLS

(1) ITEM NO	(2) SMR CODE	(3) NSN	(4) CAGEC	(5) PART NUMBER	(6) DESCRIPTION AND USABLE ON CODE (UOC)	(7) QTY
					GROUP 8100 SPECIAL TOOLS LIST	
					FIG. 90 SPECIAL TOOLS	
1	PFDZZ	5120-00-952-7218	91547	LTCT2966	BASE,DRIVER,BEARING BOI:1 PER 1-75 END ITEMS	
2	PFDZZ	4920-00-841-0188	91547	LTCT3038	FIXTURE ASSY,VARIAB BOI:1 PER 1-75 END ITEMS	
3	PFDZZ	4920-00-946-2188	91547	LTCT3040	FIXTURE,HOLDING CAAR ASSEMBLY BOI:1 PER 1-75 END ITEMS	
4	PFDDD	4920-00-871-0222	91547	LTCT313	CHECK STAND,OIL FLO BOI:1 PER 1-75 END ITEMS	
5	XDDZZ		91547	LTCT315	TESTER,IGNITION,JET BOI:1 PER 1-75 END ITEMS	
6	XDDZZ		91547	LTCT316	TEST STAND,ANTI-ICI BOI:1 PER 1-75 END ITEMS	
7	XDDDD		91547	LTCT340	TEST STAND,LUBE AND BOI:1 PER 1-75 END ITEMS	
8	PFDZZ	5220-00-849-4350	91547	LTCT3486	GAGE,BACKLASH BOI:1 PER 1-75 END ITEMS	
					END OF FIGURE	

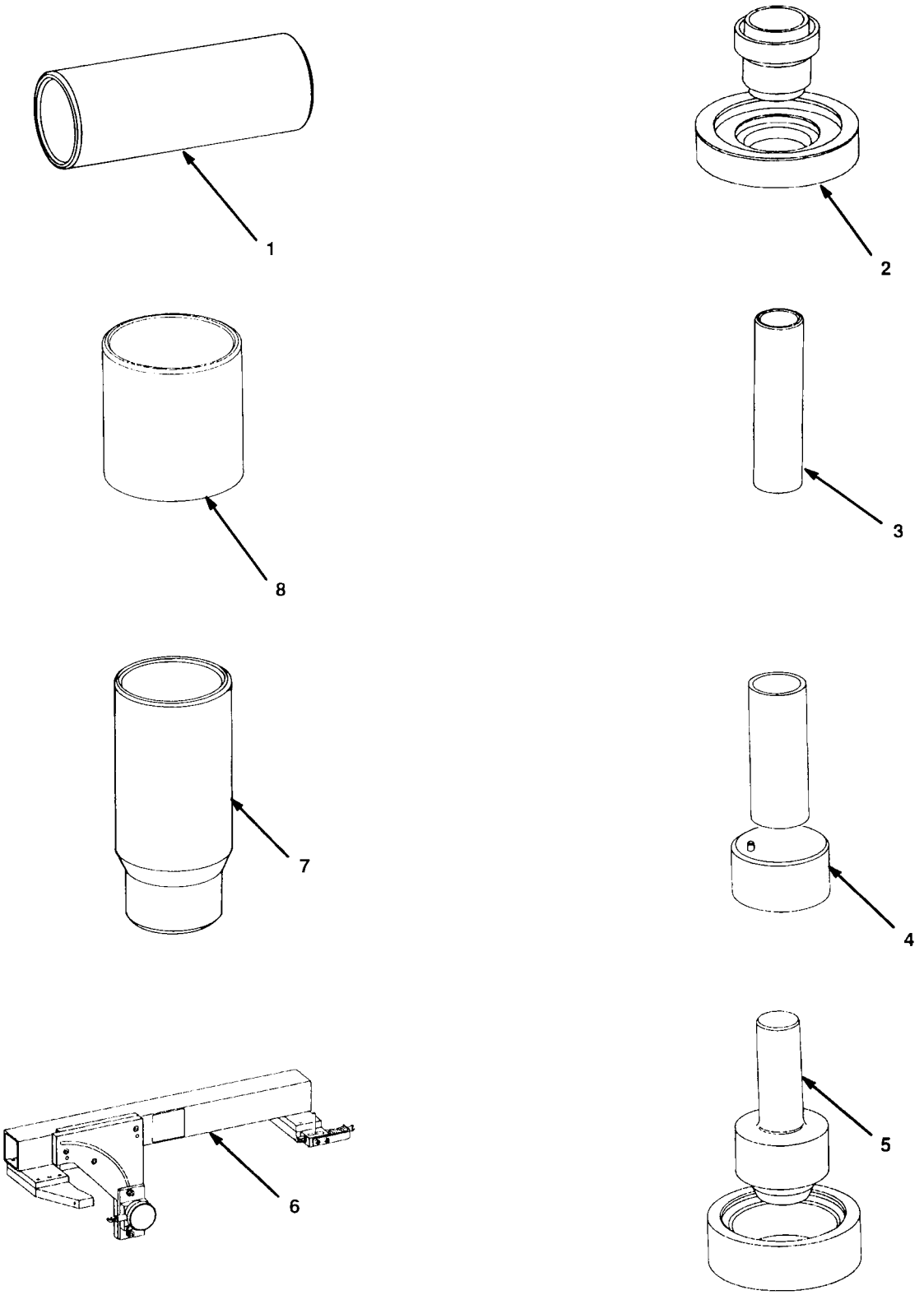

FIGURE 91. SPECIAL TOOLS

(1) ITEM NO	(2) SMR CODE	(3) NSN	(4) CAGEC	(5) PART NUMBER	(6) DESCRIPTION AND USABLE ON CODE (UOC)	(7) QTY
					GROUP 8100 SPECIAL TOOLS LIST	
					FIG. 91 SPECIAL TOOLS	
1	PBFZZ	3120-00-071-8260	91547	LTCT3492	BUSHING,SLEEVE BOI:1 PER 1-50 END ITEMS	
1	PBFZZ	3120-00-071-8263	91547	LTCT3493	BUSHING,SLEEVE BOI:1 PER 1-50 END ITEMS	
1	PBFZZ	3120-00-071-8264	91547	LTCT3494	BUSHING,SLEEVE BOI:1 PER 1-50 ENT ITEMS	
1	PBFZZ	3120-00-071-8261	91547	LTCT3636	BUSHING,SLEEVE BOI:1 PER 1-75 END ITEMS	
1	PBDZZ	3120-00-067-8321	91547	LTCT3637	BUSHING,SLEEVE BOI:1 PER 1-75 END ITEMS	
2	PBFZZ	4920-00-071-4553	91547	LTCT3638	INSTALLATION TOOLS, BOI:1 PER 1-50-END ITEMS	
3	PBOZZ	3120-00-067-8320	91547	LTCT3640	BUSHING,SLEEVE BOI:1 PER 10-25 END ITEMS	
4	PFDZZ	5120-00-071-4555	91547	LTCT3646	INSTALLATION TOOL,B BOI:1 PER 1-75 END ITEMS	
5	PBOZZ	5120-00-071-4556	91547	LTCT3648	REMOVAL TOOL,SEAL BOI:1 PER 10-25 END ITEMS	
6	PFDZZ	5220-00-131-1995	91547	LTCT3653	GAGE,CONTOUR BOI:1 PER 1-75 END ITEMS	
7	PFDZZ	5120-00-067-8331	91547	LTCT3654	INSTALLATION AND RE BOI:1 PER 1-75 END ITEMS	
8	PBDZZ	3120-00-067-8324	91547	LTCT3658	BUSHING,SLEEVE BOI:1 PER 1-75 END ITEMS	
8	PBDZZ	3120-00-067-8326	91547	LTCT3659	BUSHING,SLEEVE BOI:1 PER 1-75 END ITEMS	
8	PBDZZ	3120-00-067-8328	91547	LTCT3660	BUSHING,SLEEVE BOI:1 PER 1-75 END ITEMS	
8	PBDZZ	3120-00-067-8330	91547	LTCT3661	BUSHING,SLEEVE BOI:1 PER 1-75 END ITEMS	
8	PBDZZ	3120-00-067-8329	91547	LTCT3662	BUSHING,SLEEVE BOI:1 PER 1-75 END ITEMS	
8	PBDZZ	3120-00-071-4571	91547	LTCT3663	BUSHING,SLEEVE BOI:1 PER 1-75 END ITEMS	
8	PBDZZ	3120-00-071-4569	91547	LTCT3664	BUSHING,SLEEVE BOI:1 PER 1-75 END ITEMS	
					END OF FIGURE	

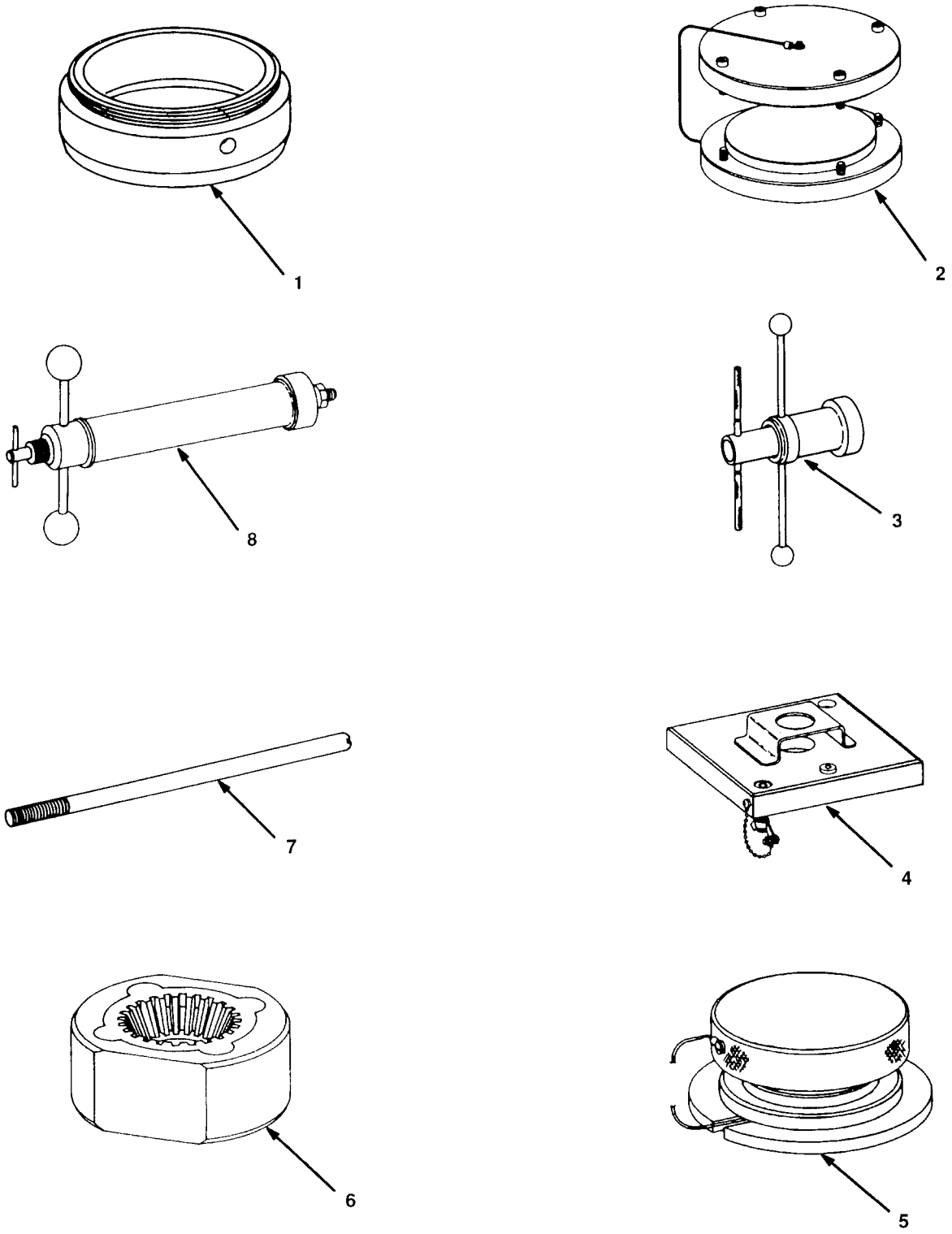

FIGURE 92. SPECIAL TOOLS

(1) ITEM NO	(2) SMR CODE	(3) NSN	(4) CAGEC	(5) PART NUMBER	(6) DESCRIPTION AND USABLE ON CODE (UOC)	(7) QTY
					GROUP 8100 SPECIAL TOOLS LIST	
					FIG. 92 SPECIAL TOOLS	
1	PBOZZ	4920-00-997-4712	91547	LTCT3685	ADAPTER AND GUIDE A BOI:1 PER 10-25 END ITEMS	
2	PFDZZ	4920-00-034-5875	91547	LTCT3694	FIXTURE,TEST,PRESSU BOI:1 PER 1-75 END ITEMS	
3	PFDZZ	5120-00-828-3100	91547	LTCT3706	INSERTER,BEARING AN BOI:1 PER 1-75 END ITEMS	
4	PFDZZ	4920-00-484-3954	91547	LTCT3788	JIG,DRILL,HOUSING,C BOI:1 PER 1-75 END ITEMS	
5	PBFZZ	5120-00-727-4481	91547	LTCT3825	INSTALLATION TOOL,S BOI:1 PER 1-50 END ITEMS	
6	PFDZZ	4920-00-889-7249	91547	LTCT3833	HOLDER,GEARSHAFT BOI:1 PER 1-75 END ITEMS	
7	PFDZZ	5120-00-898-0697	91547	LTCT387	ALIGNMENT PIN BOI:1 PER 1-75 END ITEMS	
8	PFDZZ	5120-00-878-7797	91547	LTCT3911	REMOVER,PLUG BOI:1 PER 1-75 END ITEMS	
					END OF FIGURE	

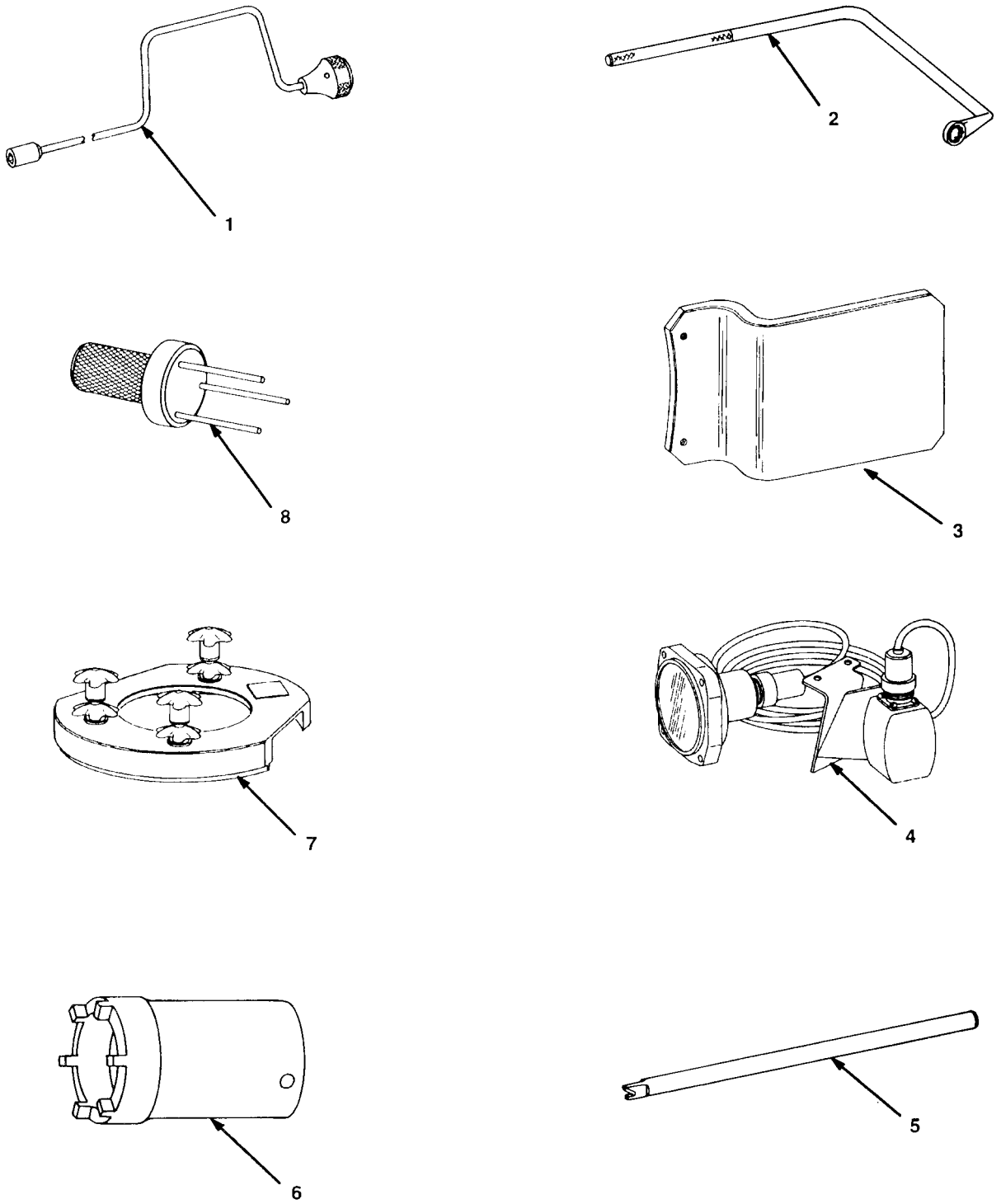

FIGURE 93. SPECIAL TOOLS

(1) ITEM NO	(2) SMR CODE	(3) NSN	(4) CAGEC	(5) PART NUMBER	(6) DESCRIPTION AND USABLE ON CODE (UOC)	(7) QTY
					GROUP 8100 SPECIAL TOOLS LIST	
					FIG. 93 SPECIAL TOOLS	
1	PAOZZ	5120-00-875-2588	91547	LTCT393	WRENCH,SOCKET BOI:1 PER 1 - 20 END ITEMS	
2	PBOZZ	5120-00-878-6153	91547	LTCT3938	WRENCH,BOX BOI:1 PER 10-25 END ITEMS	
3	PBFZZ	5340-00-880-7677	91547	LTCT3955	BRACKET,DOUBLE ANGL BOI:1 PER 1-50 END ITEMS	
4	PFDDD	4920-00-878-5205	91547	LTCT3963	INLET GUIDE VANE PO SEE SECTION 2 FIG. 68 FOR BREAKDOWN BOI:1 PER 1-75 END ITEMS	
5	MFFZZ		91547	LTCT3981	CRIMPING TOOL,LOCKI BOI:1 PER 1-50 END ITEMS	
6	PFDZZ	5120-00-913-5926	91547	LTCT4002	SOCKET,WRENCH,FACE 6 PRONGS,0.238 IN.MAX W, 0.313 IN. LG,FEMALE SQ DRIVE 0.506 IN.MAX,2.500 IN.O/D BOI:1 PER 1-75 END ITEMS	
7	XDDZZ		91547	LTCT4007	PULLER ASSEMBLY,MEC BOI:1 PER 1-75 END ITEMS	
8	PFDZZ	5120-00-952-7217	91547	LTCT4012	DRIVER,BEARING REMO BOI:1 PER 1-75 END ITEMS	
					END OF FIGURE	

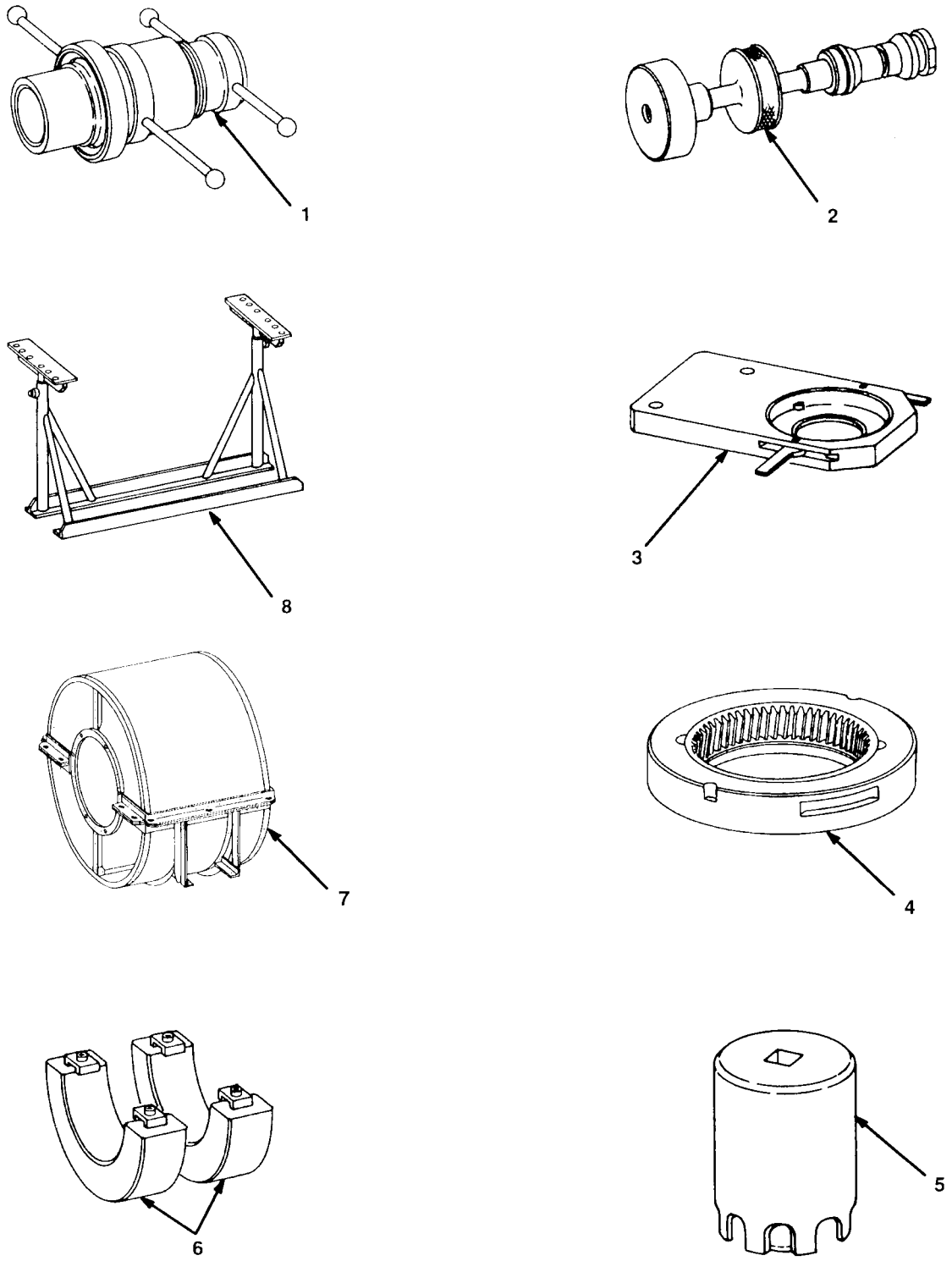

FIGURE 94. SPECIAL TOOLS

(1) ITEM NO	(2) SMR CODE	(3) NSN	(4) CAGEC	(5) PART NUMBER	(6) DESCRIPTION AND USABLE ON CODE (UOC)	(7) QTY
					GROUP 8100 SPECIAL TOOLS LIST	
					FIG. 94 SPECIAL TOOLS	
1	PBFZZ	4920-00-983-7555	91547	LTCT4013	INSTALLING TOOL,CON BOI:1 PER 1-50 END ITEMS	
2	PFDZZ	3460-00-842-6118	91547	LTCT4014	ARBOR,BALANCING,TUR BOI:1 PER 1-75 END ITEMS	
3	PFDZZ	4940-00-946-2195	91547	LTCT4018	FIXTURE ASSEMBLLY HO BOI:1 PER 1-75 END ITEMS	
4	PFDZZ	4920-00-946-4860	91547	LTCT4019	RING ASSEMBLY BOI:1 PER 1-75 END ITEMS	
5	PFDZZ	5120-00-917-7116	91547	LTCT4020	WRENCH ASSEMBLY,NUT BOI:1 PER 1-75 END ITEMS	
6	XBDDD		91547	LTCT4028	ADAPTER,BEARING SET SEE SECTION 2 FIG. 69 FOR BREAKDOWN BOI:1 PER 1-75 END ITEMS	
6	PFDZZ	4920-00-929-8451	91547	LTCT4029	ADAPTER,BEARING SET SEE SECTION 2 FIG. 70 FOR BREAKDOWN BOI:1 PER 1-75 END ITEMS	
7	XDDZZ		91547	LTCL403	SCREEN ASSEMBLY,INL BOI:1 PER 1-75 END ITEMS	
8	PFDZZ	4920-00-863-3827	91547	LTCT404	STAND,MAINTENANCE,A BOI: 1 PER 1-75 END ITEMS	
					END OF FIGURE	

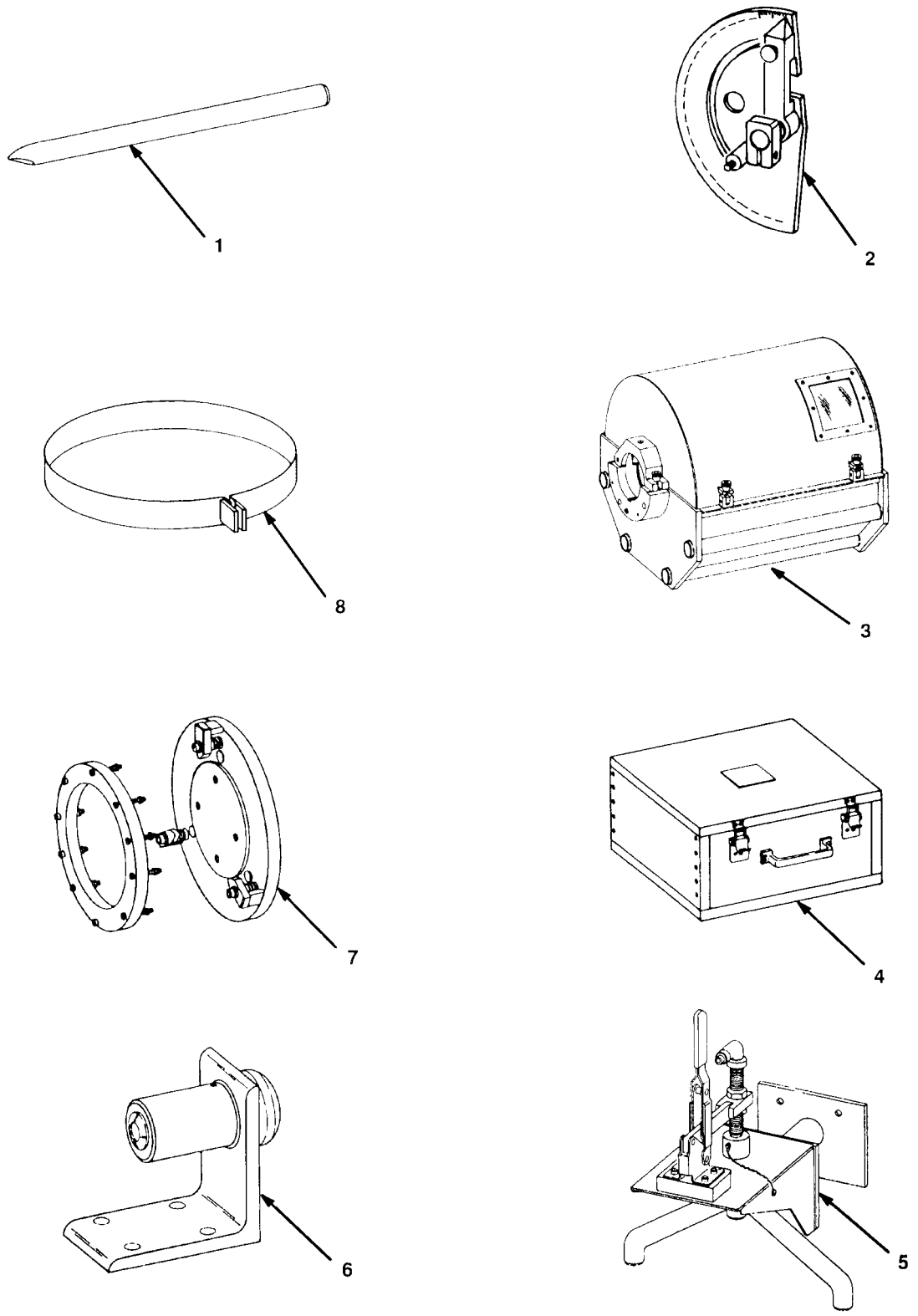

FIGURE 95. SPECIAL TOOLS

(1) ITEM NO	(2) SMR CODE	(3) NSN	(4) CAGEC	(5) PART NUMBER	(6) DESCRIPTION AND USABLE ON CODE (UOC)	(7) QTY
					GROUP 8100 SPECIAL TOOLS LIST	
					FIG. 95 SPECIAL TOOLS	
1	PFDZZ	5120-00-952-7256	91547	LTCT4051	STAKING TOOL,BOLT R BOI:1 PER 1-75 END ITEMS	
2	PFDZZ	4920-00-864-0463	91547	LTCT407	FIXTURE,TEST,FUEL C BOI:1 PER 1-75 END ITEMS	
3	PFDZZ	4920-00-841-0270	91547	LTCT4078	FIXTURE,HOLDING,ROT BOI:1 PER 1-75 END ITEMS	
4	XDDDD		91547	LTCT4084	TESTER,PRESSURE,HOU SEE SECTION 2 FIG. 71 FOR BREAKDOWN BOI:1 PER 1-75 END ITEMS	
5	PFDZZ	4920-00-871-0226	91547	LTCT409	FIXTURE,TEST,FUEL D BOI:1 PER 1-75 END ITEMS	
6	PFDZZ	4920-00-871-5132	91547	LTCT413	FIXTURE,FUEL INJECT BOI:1 PER 1-75 END ITEMS	
7	PFDZZ	4920-00-891-1366	91547	LTCT4153	FIXTURE,HOLDING,HOU BOI:1 PER 1-75 END ITEMS	
8	PBFZZ	5120-00-840-9830	91547	LTCT4155	HANDLING TOOL,CYLIN BOI:1 PER 1-50 END ITEMS	
					END OF FIGURE	

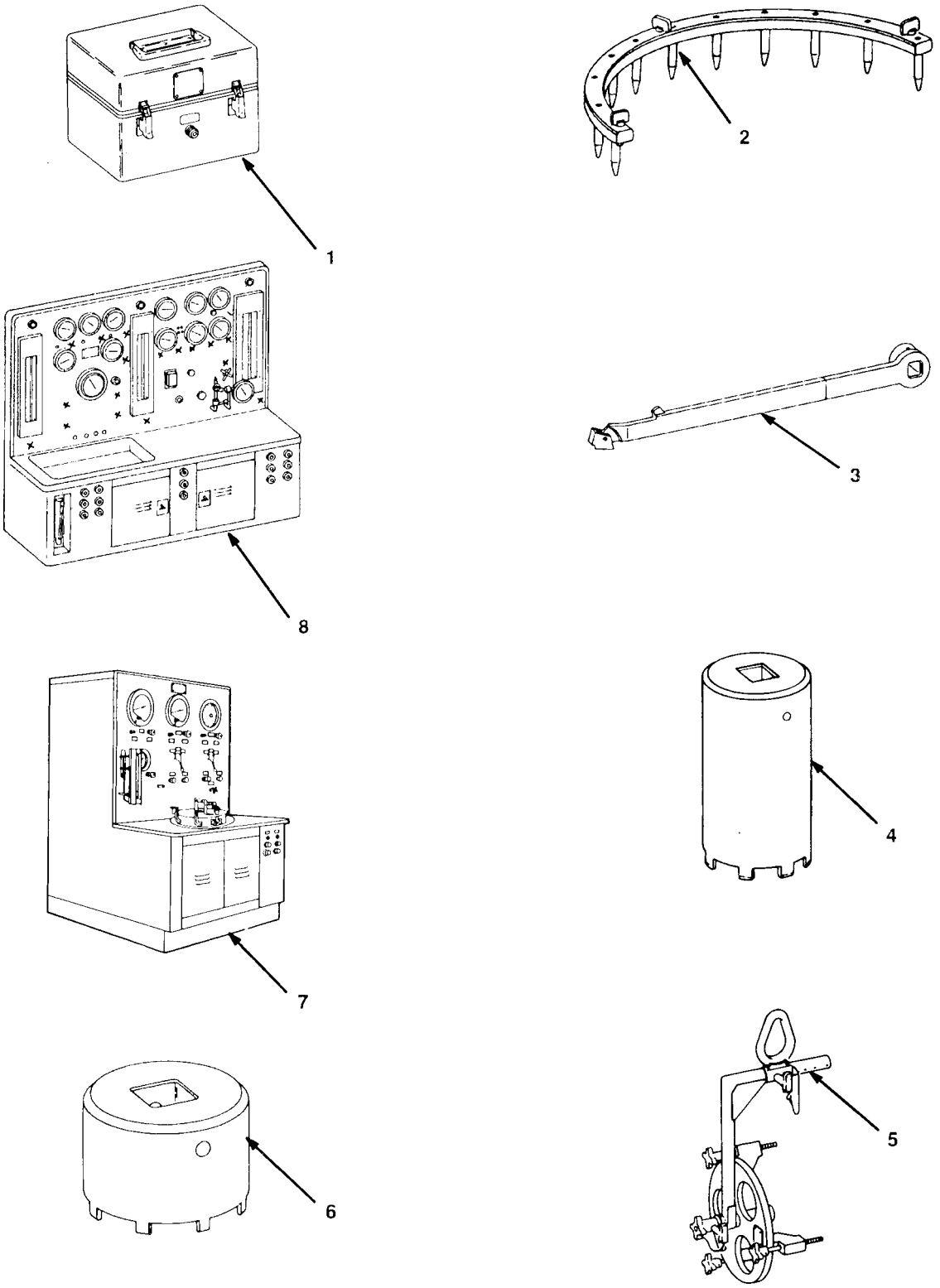

FIGURE 96. SPECIAL TOOLS

(1) ITEM NO	(2) SMR CODE	(3) NSN	(4) CAGEC	(5) PART NUMBER	(6) DESCRIPTION AND USABLE ON CODE (UOC)	(7) QTY
					GROUP 8100 SPECIAL TOOLS LIST	
					FIG. 96 SPECIAL TOOLS	
1	PBFZZ	4920-00-989-0018	91547	LTCT4172	ADAPTER KIT,FINISHI BOI:1 PER 1-50 END ITEMS	
2	PAFZZ	4920-00-089-2295	91547	LTCT4174	FIXTURE,ALIGNMENT BOI:1 PER 1-50 END ITEMS	
3	PBFZZ	4920-00-983-7360	91547	LTCT4179	INSTALLING TOOL,BLA BOI:1 PER 1-50 END ITEMS	
4	PBFZZ	5120-00-986-5949	91547	LTCT4181	SOCKET,WRENCH,FACE BOI:1 PER 1-50 END ITEMS	
5	PBFZZ	4920-00-994-1129	91547	LTCT4182	ADAPTER,HOISTING,RE BOI:1 PER 1-50 END ITEMS	
6	PFDZZ	5120-00-839-7011	91547	LTCT4190	SOCKET,WRENCH,FACE BOI:1 PER 1-75 END ITEMS	
7	PBDDD	4920-00-886-1286	91547	LTCT421	TEST STAND,COMPRESS BOI:1 PER 1-75 END ITEMS	
8	PFDDD	4920-00-886-1287	91547	LTCT422	TEST STAND,OIL PUMP METER BOI:1 PER 1-75 END ITEMS	
					END OF FIGURE	

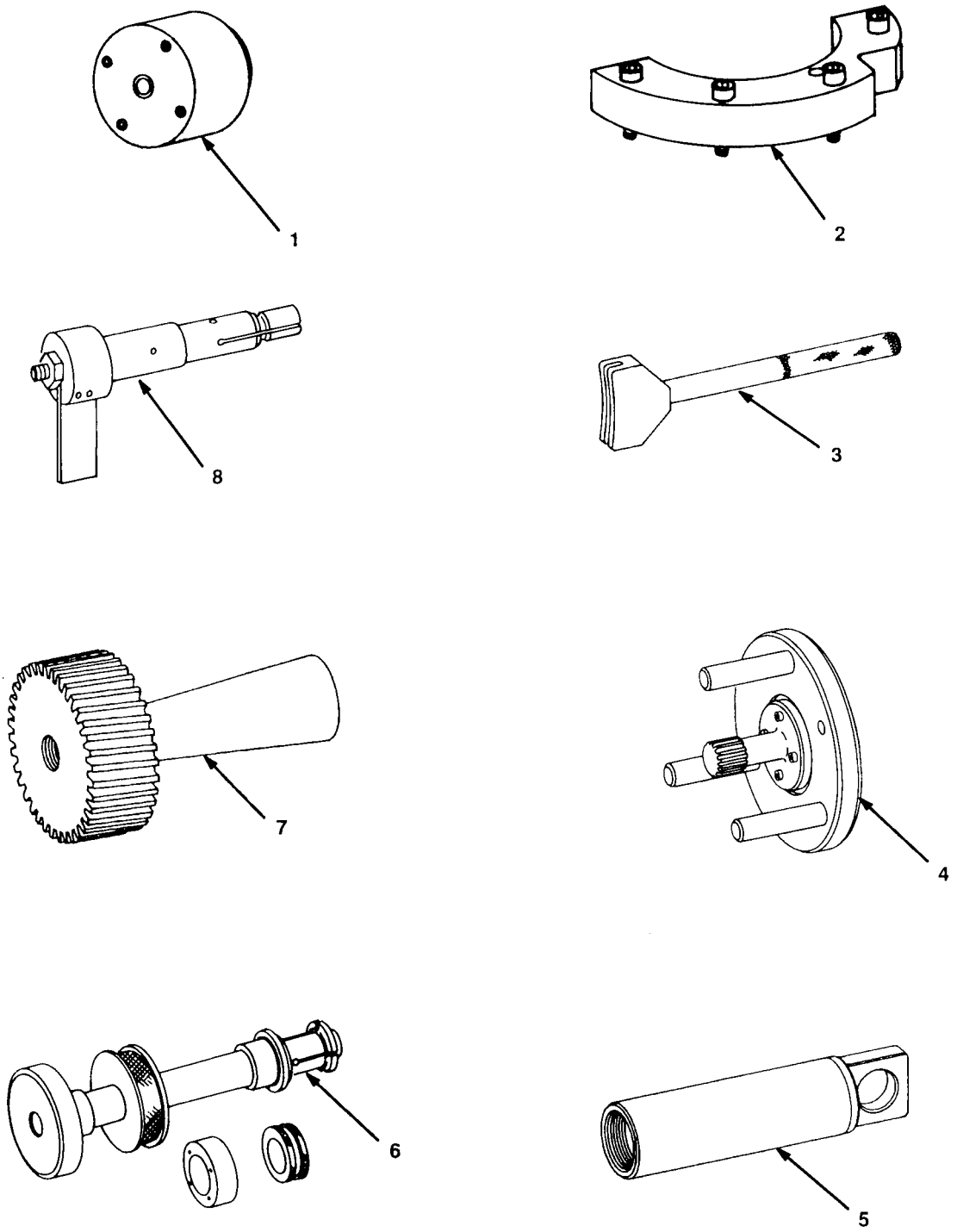

FIGURE 97. SPECIAL TOOLS

(1) ITEM NO	(2) SMR CODE	(3) NSN	(4) CAGEC	(5) PART NUMBER	(6) DESCRIPTION AND USABLE ON CODE (UOC)	(7) QTY
					GROUP 8100 SPECIAL TOOLS LIST	
					FIG. 97 SPECIAL TOOLS	
1	PFDZZ	4920-00-886-1288	91547	LTCT423	ADAPTER ASSY,TEST F BOI:1 PER 1-75 END ITEMS	
2	PFDZZ	4920-00-878-5207	91547	LTCT4535	FIXTURE,OIL PRESSUR BOI:1 PER 1-75 END ITEMS	
3	PFDZZ	4920-00-842-6021	91547	LTCT4547	STRAIGHTENING TOOL, BOI:1 PER 1-75 END ITEMS	
4	PBFZZ	4920-00-983-7514	91547	LTCT4553	FIXTURE,HOLDING,TUR BOI:1 PER 1-50 END ITEMS	
5	PFDZZ	4920-00-839-0710	91547	LTCT4558	ADAPTER,HOISTING CO BOI:1 PER 1-75 END ITEMS	
6	PFDZZ	3460-00-996-2171	91547	LTCT456	ARBOR,BALANCING DIS BOI:1 PER 1-75 END ITEMS	
7	PFDZZ	5120-00-988-8852	91547	LTCT4560	ALIGNMENT TOOL,GEAR BOI:1 PER 1-75 END ITEMS	
8	PFDZZ	4920-00-842-6126	91547	LTCT4564	FLAG,BACKLASH GEAR BOI:1 PER 1-75 END ITEMS	
					END OF FIGURE	

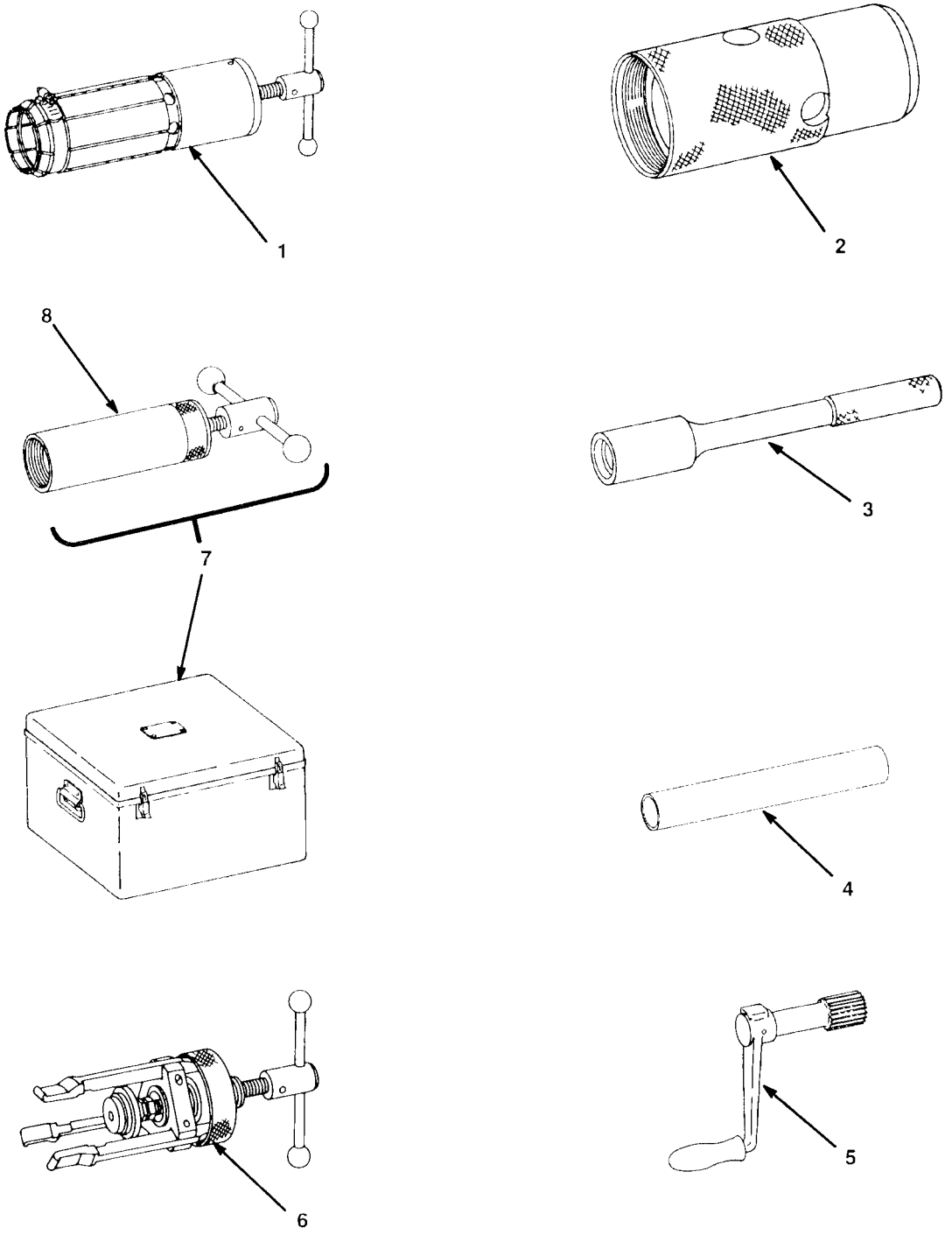

FIGURE 98. SPECIAL TOOLS

(1) ITEM NO	(2) SMR CODE	(3) NSN	(4) CAGEC	(5) PART NUMBER	(6) DESCRIPTION AND USABLE ON CODE (UOC)	(7) QTY
					GROUP 8100 SPECIAL TOOLS LIST	
					FIG. 98 SPECIAL TOOLS	
1	PBFZZ	4920-00-989-0024	91547	LTCT4568	PULLER,FORWARD SEAL BOI:1 PER 1-50 END ITEMS	
2	PBFZZ	5120-00-834-6711	91547	LTCT4571	ARBOR,SHAFT,COMPRES BOI:1 PER 1-50 END ITEMS	
3	PBFZZ	4920-00-842-6130	91547	LTCT4576	INSTALLATION TOOL,G BOI:1 PER 1-50 END ITEMS	
4	PBFZZ	4920-00-891-8372	91547	LTCT4602	GUIDE,RETAINER GEAR BOI:1 PER 1-50 END ITEMS	
5	PBFZZ	5340-00-842-6040	91547	LTCT4650	CRANK,HAND BOI:1 PER 1-50 END ITEMS	
6	PFDZZ	5120-00-839-6913	91547	LTCT4670	PULLER,MECHANICAL BOI:1 PER 1-75 END ITEMS	
7	PAFZZ	5180-00-851-1461	91547	LTCT4676	TOOL KIT,AIRCRAFT BOI:1 PER 1-50 END ITEMS	
8	PAFZZ	5120-00-841-9739	91547	LTCT4677	.PULLER,MECHANICAL	
					END OF FIGURE	

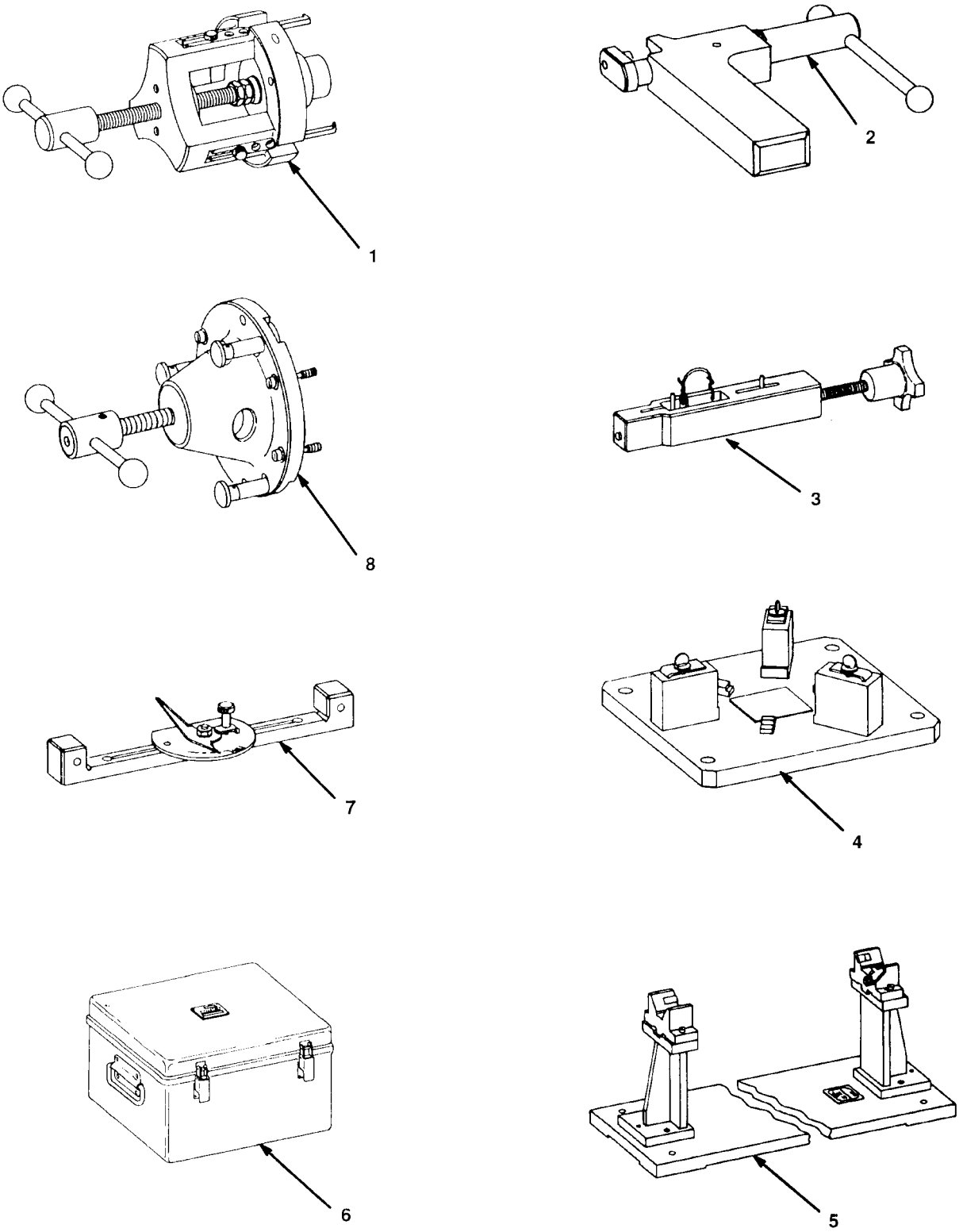

FIGURE 99. SPECIAL TOOLS

(1) ITEM NO	(2) SMR CODE	(3) NSN	(4) CAGEC	(5) PART NUMBER	(6) DESCRIPTION AND USABLE ON CODE (UOC)	(7) QTY
					GROUP 8100 SPECIAL TOOLS LIST	
					FIG. 99 SPECIAL TOOLS	
1	PAFZZ	5120-00-977-2191	91547	LTCT4680	PULLER,MECHANICAL BOI:1 PER 1-50 END ITEMS	
2	PBFZZ	4920-00-989-0020	91547	LTCT4692	TOOL,REMOVAL BOI:1 PER 1-50 END ITEMS	
3	PFDZZ	5120-00-891-1335	91547	LTCT4698	PULLER,INSTALLATION BOI:1 PER 1-75 END ITEMS	
4	PFDZZ	4920-00-841-0276	91547	LTCT4713	HOLDING FIXTURE,BEA BOI:1 PER 1-75 END ITEMS	
5	PFDZZ	4920-00-075-0025	91547	LTCT4719	FIXTURE,TEST,COMPRE BOI:1 PER 1-75 END ITEMS	
6	PFDZZ	4920-00-878-5598	91547	LTCT4726	REMOVAL KIT,TURBINE BOI:1 PER 1-75 END ITEMS	
7	PFDZZ	4920-00-841-0415	91547	LTCT4750	PROTRACTOR ASSEMBLY BOI:1 PER 1-75 END ITEMS	
8	PAFZZ	5120-00-842-6360	91547	LTCT4800	PULLER,MECHANICAL BOI:1 PER 1-50 END ITEMS	
					END OF FIGURE	

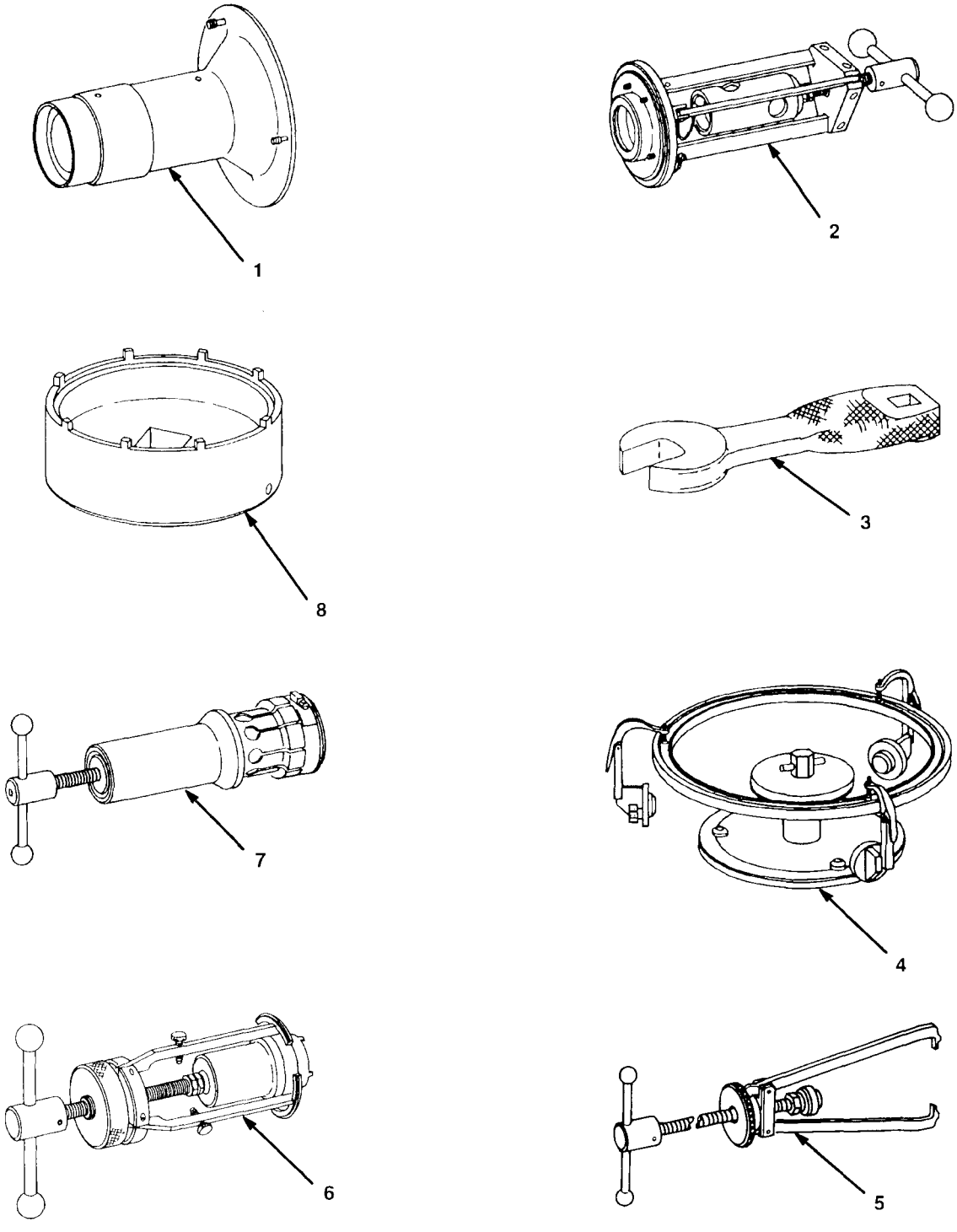

FIGURE 100. SPECIAL TOOLS

(1) ITEM NO	(2) SMR CODE	(3) NSN	(4) CAGEC	(5) PART NUMBER	(6) DESCRIPTION AND USABLE ON CODE (UOC)	(7) QTY
					GROUP 8100 SPECIAL TOOLS LIST	
					FIG. 100 SPECIAL TOOLS	
1	PFDZZ	4920-00-842-6278	91547	LTCT4807	FIXTURE,TEST,OIL SP BOI:1 PER 1-75 END ITEMS	
2	PBFZZ	5120-00-834-6712	91547	LTCT4809	PULLER,MECHANICAL BOI:1 PER 1-50 END ITEMS	
3	PBOZZ	5120-00-034-6193	91547	LTCT4810	WRENCH,CROWFOOT ATT BOI:1 PER 10-25 END ITEMS	
4	PFDDD	4920-00-119-1075	91547	LTCT4817	FIXTURE,AIRCRAFT MA BOI:1 PER 1-75 END ITEMS	
5	PFDZZ	5120-00-780-4424	91547	LTCT483	PULLER,MECHANICAL BOI:1 PER 1-75 END ITEMS	
6	PBFZZ	5120-00-834-6713	91547	LTCT4842	PULLER,MECHANICAL BOI:1 PER 1-50 END ITEMS	
7	PBFZZ	5120-00-834-6714	91547	LTCT4846	PULLER,MECHANICAL BOI:1 PER 1-50 END ITEMS	
8	PFDZZ	5120-00-780-8379	91547	LTCT487	SOCKET,WRENCH,FACE BOI:1 PER 1-75 END ITEMS	
					END OF FIGURE	

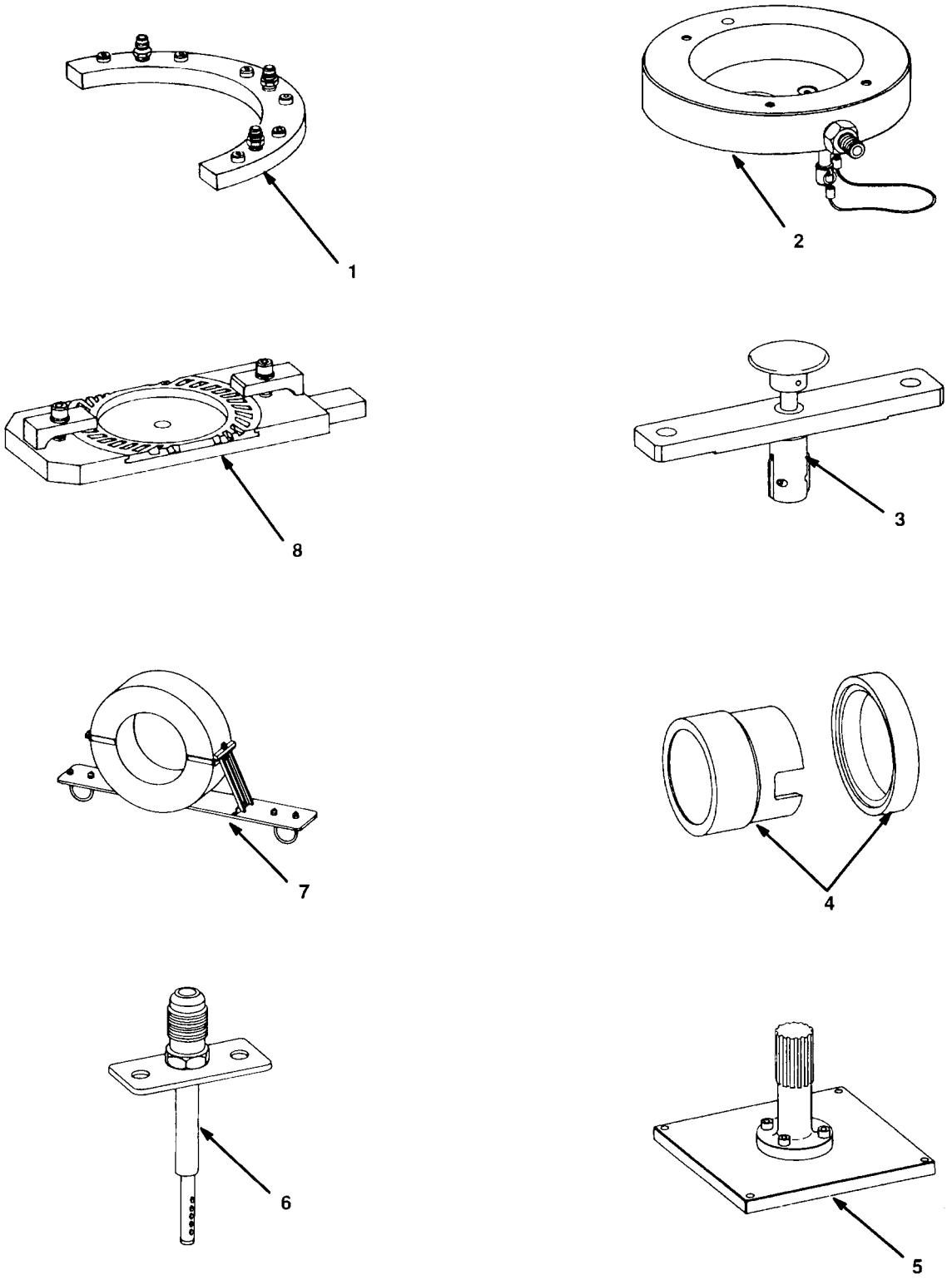

FIGURE 101. SPECIAL TOOLS

(1) ITEM NO	(2) SMR CODE	(3) NSN	(4) CAGEC	(5) PART NUMBER	(6) DESCRIPTION AND USABLE ON CODE (UOC)	(7) QTY
					GROUP 8100 SPECIAL TOOLS LIST	
					FIG. 101 SPECIAL TOOLS	
1	PFDZZ	4920-00-842-6325	91547	LTCT4875	FIXTURE,TEST,PRESSU BOI:1 PER 1-75 END ITEMS	
2	PFDZZ	4920-00-034-5879	91547	LTCT4900	FIXTURE,TEST,OIL FL BOI:1 PER 1-75 END ITEMS	
3	PFDZZ	4920-00-878-6173	91547	LTCT4904	FIXTURE,HOLDING,ACC BOI:1 PER 1-75 END ITEMS	
4	PBFZZ	4920-00-070-1162	91547	LTCT4947	INSTALLATION TOOL,B BOI:1 PER 1-50 END ITEMS	
5	PFDZZ	4920-00-011-8940	91547	LTCT496	FIXTURE,AIRCRAFT MA BOI:1 PER 1-75 END ITEMS	
6	PFDZZ	4920-00-855-6069	91547	LTCT4981	PROBE,PRESSURE BOI:1 PER 1-75 END ITEMS	
7	PFDZZ	4920-00-841-0277	91547	LTCT499	SHROUD,BALANCE,TURB BOI:1 PER 1-75 END ITEMS	
8	PFDZZ	4920-00-105-3033	91547	LTCT4996	FIXTURE,HOLDING,GEA BOI:1 PER 1-75 END ITEMS	
					END OF FIGURE	

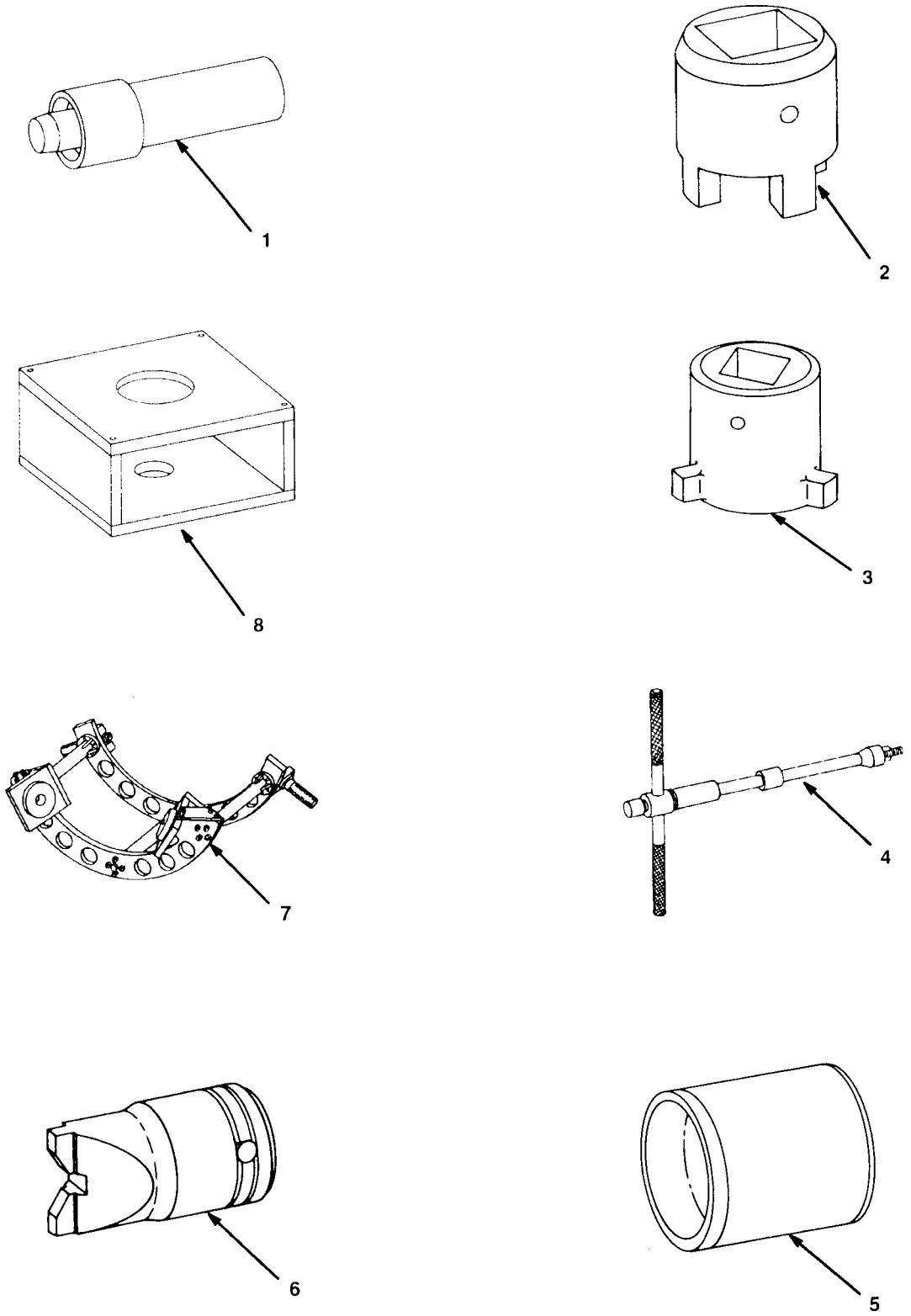

FIGURE 102. SPECIAL TOOLS

(1) ITEM NO	(2) SMR CODE	(3) NSN	(4) CAGEC	(5) PART NUMBER	(6) DESCRIPTION AND USABLE ON CODE (UOC)	(7) QTY
					GROUP 8100 SPECIAL TOOLS LIST	
					FIG. 102 SPECIAL TOOLS	
1	PBOZZ	5120-00-446-1585	91547	LTCT501	TOOL,INSTALLATION S BOI:1 PER 10-25 END ITEMS	
2	PBOZZ	4920-00-473-7589	91547	LTCT505	SOCKET,WRENCH BOI:1 PER 1-50 END ITEMS	
3	PBOZZ	5120-00-473-7591	91547	LTCT506	SOCKET,WRENCH,FACE BOI:1 PER 1-50 END ITEMS	
4	PBFZZ	5120-00-446-1586	91547	LTCT509	PULLER,MECHANICAL BOI:1 PER 1-50 END ITEMS	
5	PAOZZ	4920-00-491-0840	91547	LTCT511	INSTALLATION TOOL,S BOI:1 PER 10-25 END ITEMS	
6	XDFZZ		91547	LTCT519	BIT,SCREWDRIVER BOI:1 PER 1-50 END ITEMS	
7	PFDZZ	5120-00-994-3282	91547	LTCT526	FIXTURE,ALIGNMENT BOI:1 PER 1-75 END ITEMS	
8	PAFZZ	4920-00-863-3837	91547	LTCT58	FIXTURE,POWER TURBI BOI:1 PER 1-50 END ITEMS	
					END OF FIGURE	

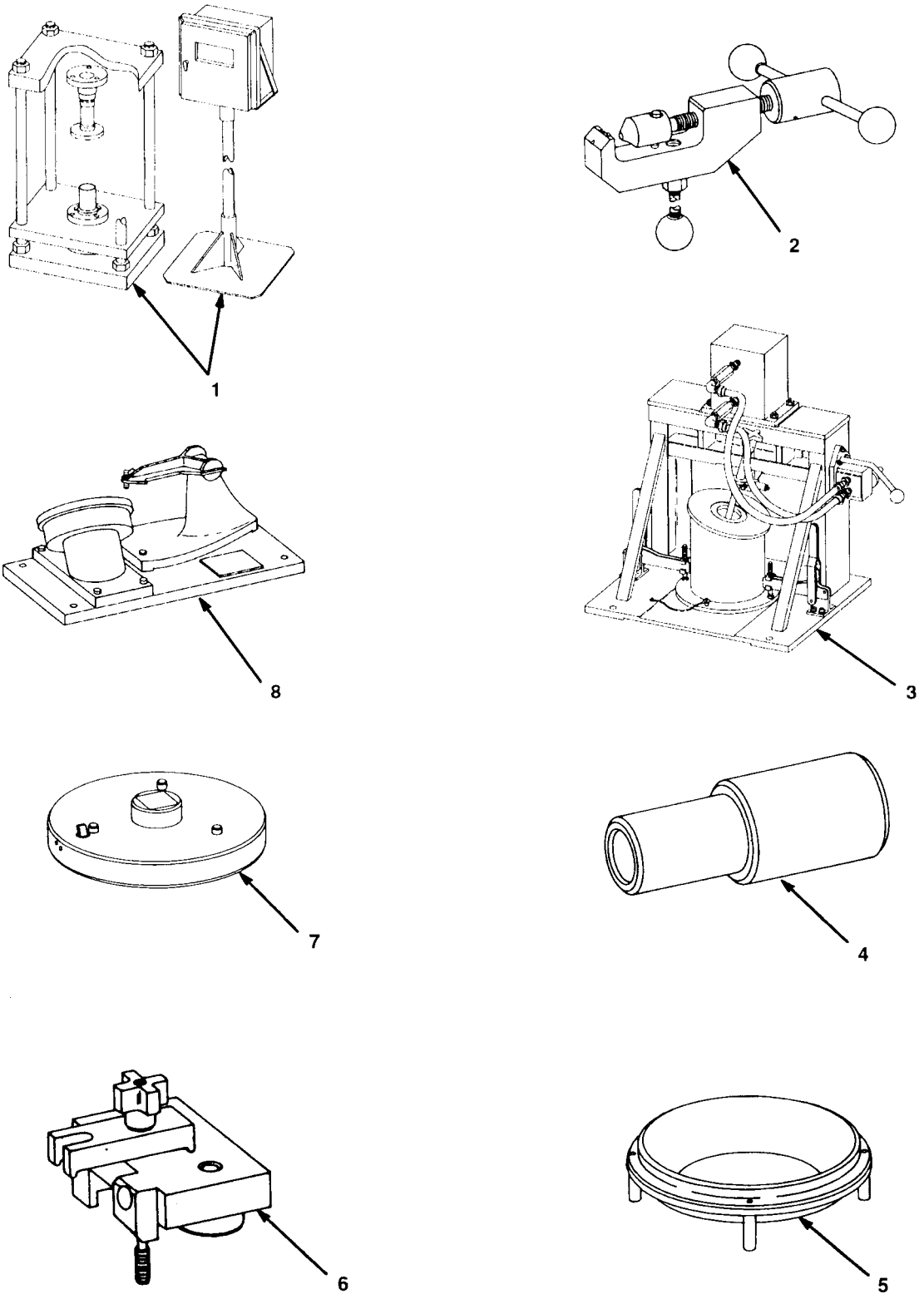

FIGURE 103. SPECIAL TOOLS

(1) ITEM NO	(2) SMR CODE	(3) NSN	(4) CAGEC	(5) PART NUMBER	(6) DESCRIPTION AND USABLE ON CODE (UOC)	(7) QTY
					GROUP 8100 SPECIAL TOOLS LIST	
					FIG. 103 SPECIAL TOOLS	
1	PFDDD	3442-00-789-5014	91547	LTCT590-2	PRESS,HYDRAULIC, V SEE SECTION 2 FIG. 72 FOR BREAKDOWN BOI:1 PER 1-75 END ITEMS	
2	PBFZZ	4920-00-079-8816	91547	LTCT6000	INSTALLATIION TOOL,A BOI:1 PER 1 - 20 END ITEMS	
3	PFDZZ	4920-00-085-2340	91547	LTCT6073	STAND,MAINTENANCE,A BOI:1 PER 1-75 END ITEMS	
4	PBOZZ	5210-00-228-8821	91547	LTCT6124	MEASURING TOOL,POWE BOI:1 PER 1-50 END ITEMS	
5	XBDZZ		91547	LTCT6139	GAGE ADAPTER,CONTOU BOI:1 PER 1-75 END ITEMS	
6	PFDZZ	4920-00-890-5180	91547	LTCT6169	JIG,DRILL,GEARBOX BOI:1 PER 1-75 END ITEMS	
7	PFDZZ	4920-00-420-0882	91547	LTCT6203	FIXTURE,ASSEMBLING, BOI:1 PER 1-75 END ITEMS	
8	XDDZZ		91547	LTCT6304	FIXTURE,ASSEMBLING, BOI:1 PER 1-75 END ITEMS UOC:EZL	
					END OF FIGURE	

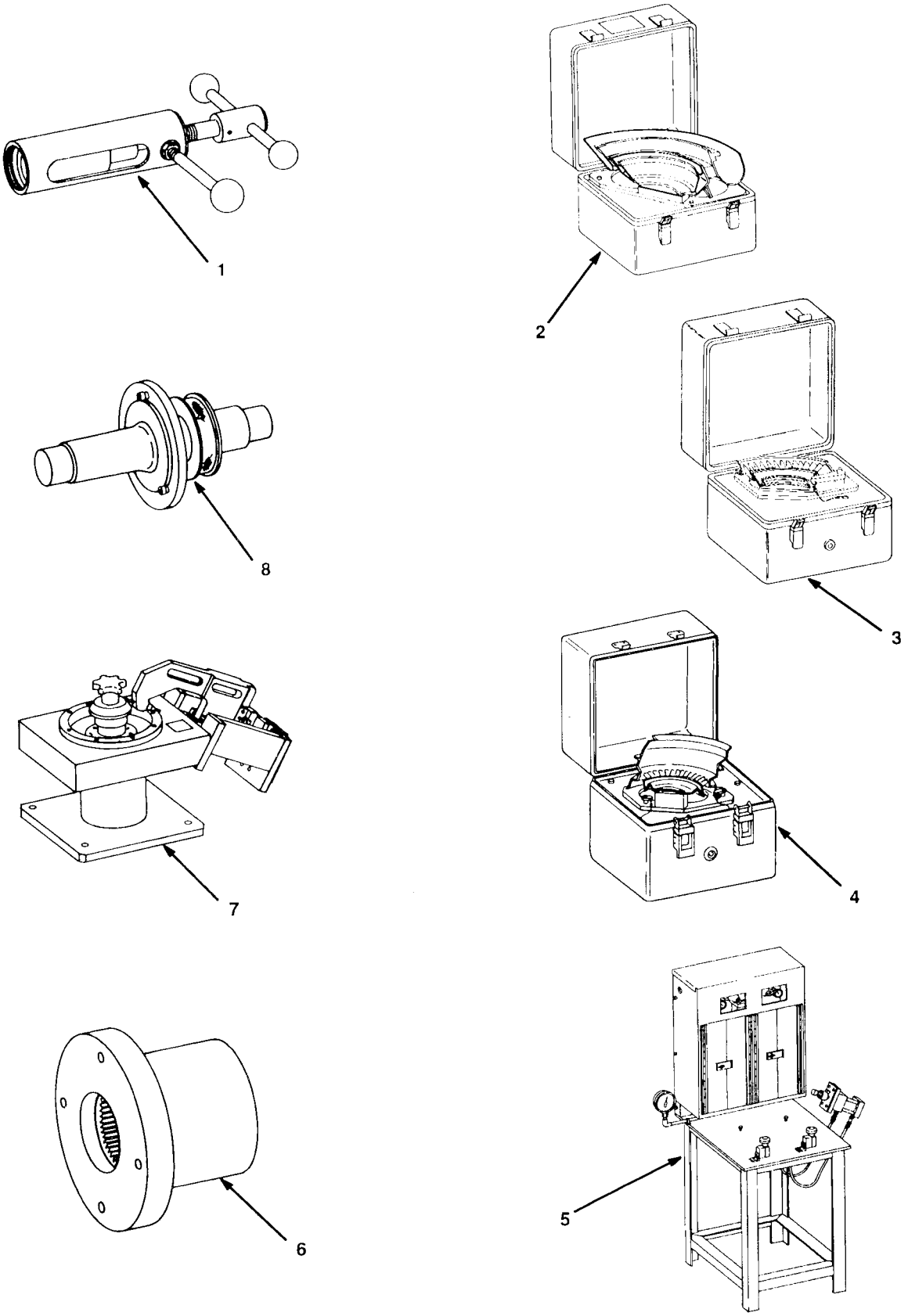

FIGURE 104. SPECIAL TOOLS

(1) ITEM NO	(2) SMR CODE	(3) NSN	(4) CAGEC	(5) PART NUMBER	(6) DESCRIPTION AND USABLE ON CODE (UOC)	(7) QTY
					GROUP 8100 SPECIAL TOOLS LIST	
					FIG. 104 SPECIAL TOOLS	
1	PBFZZ	5120-00-409-9121	91547	LTCT6465	PULLER,MECHANICAL BOI:1 PER 1-50 END ITEMS	
2	XDDZZ		91547	LTCT6483	COMPARATOR,VISCOSIT BOI:1 PER 1-75 END ITEMS	
3	XDDZZ		91547	LTCT6484	COMPARATOR,VISCOSIT BOI:1 PER 1-75 END ITEMS	
4	XDDZZ		91547	LTCT6485	COMPARATOR,VISCOSIT BOI: 1 PER 1-75 END ITEMS	
5	PFDZZ	4920-00-808-5365	91547	LTCT6616	POWER ASSEMBLY,PIN BOI:1 PER 1-75 END ITEMS	
6	PFDZZ	4920-00-156-8707	91547	LTCT6641	FIXTURE,HOLDING,ROT BOI:1 PER 1-75 END ITEMS	
7	PFDZZ	4920-00-808-5349	91547	LTCT6645	FIXTURE,INSTALLATIO BOI:1 PER 1-75 END ITEMS	
7	PFDZZ	4920-00-808-5350	91547	LTCT6646	FIXTURE,INSTALLATIO BOI:1 PER 1-75 END ITEMS	
8	PFDZZ	3460-00-156-8702	91547	LTCT6722	ARBOR,BALANCING BOI:1 PER 1-75 END ITEMS	
					END OF FIGURE	

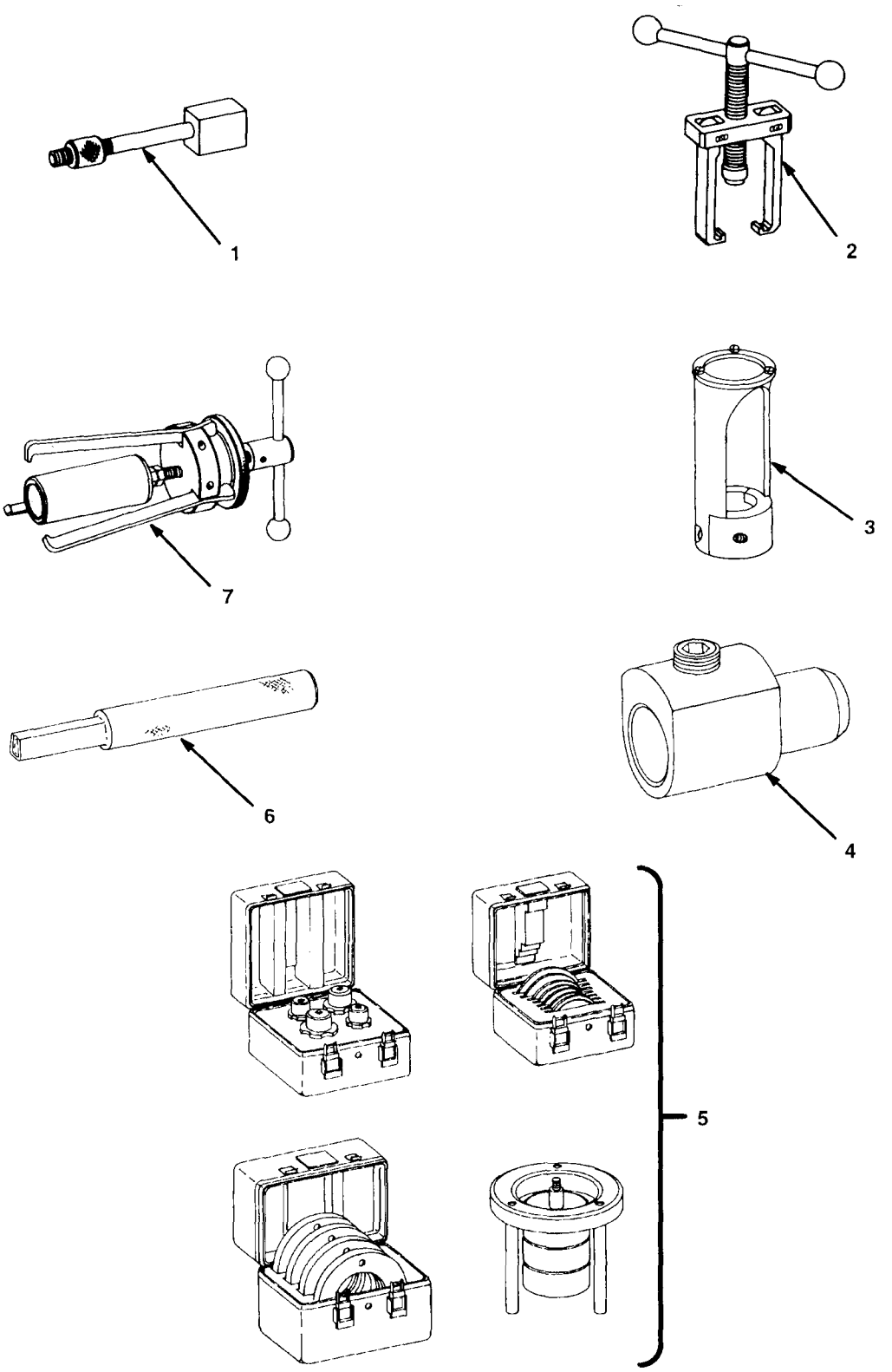

FIGURE 105. SPECIAL TOOLS

(1) ITEM NO	(2) SMR CODE	(3) NSN	(4) CAGEC	(5) PART NUMBER	(6) DESCRIPTION AND USABLE ON CODE (UOC)	(7) QTY
					GROUP 8100 SPECIAL TOOLS LIST	
					FIG. 105 SPECIAL TOOLS	
1	PBFZZ	4920-00-025-9074	91547	LTCT6740	REMOVAL TOOL,PIN BOI:1 PER 1-50 END ITEMS	
2	PFFZZ	5120-00-780-4423	91547	LTCT675	PULLER,MECHANICAL BOI:1 PER 1-75 END ITEMS	
3	PBFZZ	4920-00-228-1685	91547	LTCT6756	MOUNT,PICKUP,VIBRAT BOI:1 PER 1-50 END ITEMS	
4	PFDZZ	4920-00-113-9813	91547	LTCT6763	STOP,FUEL CONTROL BOI:1 PER 1-75 END ITEMS	
5	PFDZZ	5280-00-129-6099	91547	LTCT6837	GAGE SET,ENGINE BOI:1 PER 1-75 END ITEMS	
6	MDDZZ		91547	LTCT6905	PUNCH,SEAL PLATE BOI:1 PER 1-75 END ITEMS	
7	PBFZZ	5120-00-923-3423	91547	LTCT691	PULLER,MECHANICAL BOI:1 PER 1-50 END ITEMS	
					END OF FIGURE	

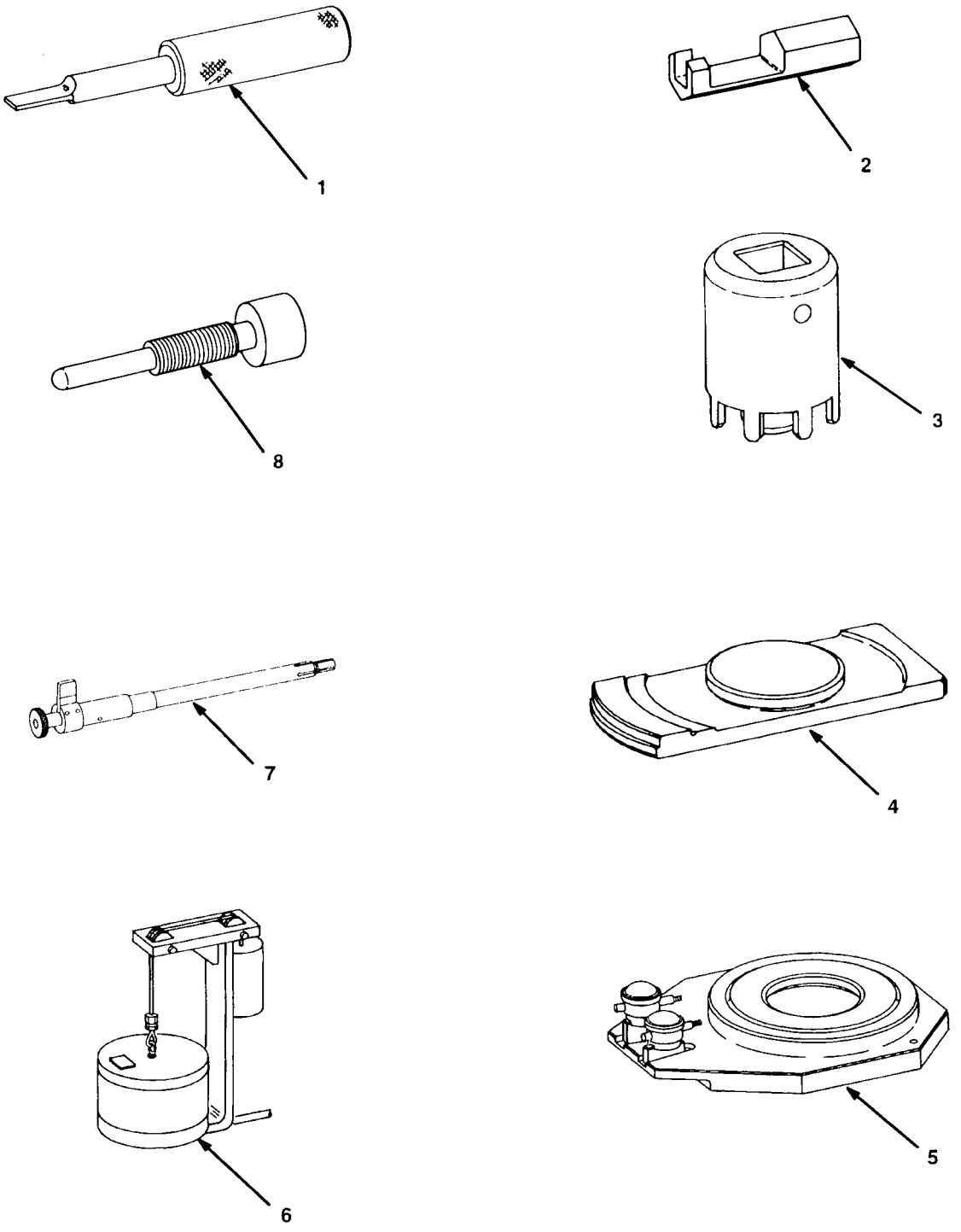

FIGURE 106. SPECIAL TOOLS

(1) ITEM NO	(2) SMR CODE	(3) NSN	(4) CAGEC	(5) PART NUMBER	(6) DESCRIPTION AND USABLE ON CODE (UOC)	(7) QTY
					GROUP 8100 SPECIAL TOOLS LIST	
					FIG. 106 SPECIAL TOOLS	
1	XDDZZ		91547	LTCT6917	GAGE,SPLINE BOI:1 PER 1-75 END ITEMS	
2	PBFZZ	5120-00-132-4931	91547	LTCT6940	WRENCH,SPECIAL BOI:1 PER 1-50 END ITEMS	
3	PFDZZ	5120-00-923-3445	91547	LTCT696	SOCKET,WRENCH,FACE BOI:1 PER 1-75 END ITEMS	
4	PFDZZ	5220-00-132-4930	91547	LTCT6961	GAGE SET,MASTER BOI:1 PER 1-75 END ITEMS	
5	PFDZZ	4920-00-228-1834	91547	LTCT6962	FIXTURE,FIRST STAGE BOI:1 PER 1-75 END ITEMS	
6	XDDZZ		91547	LTCT6987	TEST FIXTURE,ENGINE BOI:1 PER 1-75 END ITEMS	
7	PFDZZ	5220-00-522-2268	91547	LTCT716	GAGE BACKLASH BOI:1 PER 1-75 END ITEMS	
8	PFDZZ	5120-00-062-0107	91547	LTCT718	FORCING SCREW,SPECI BOI:1 PER 1-75 END ITEMS	
					END OF FIGURE	

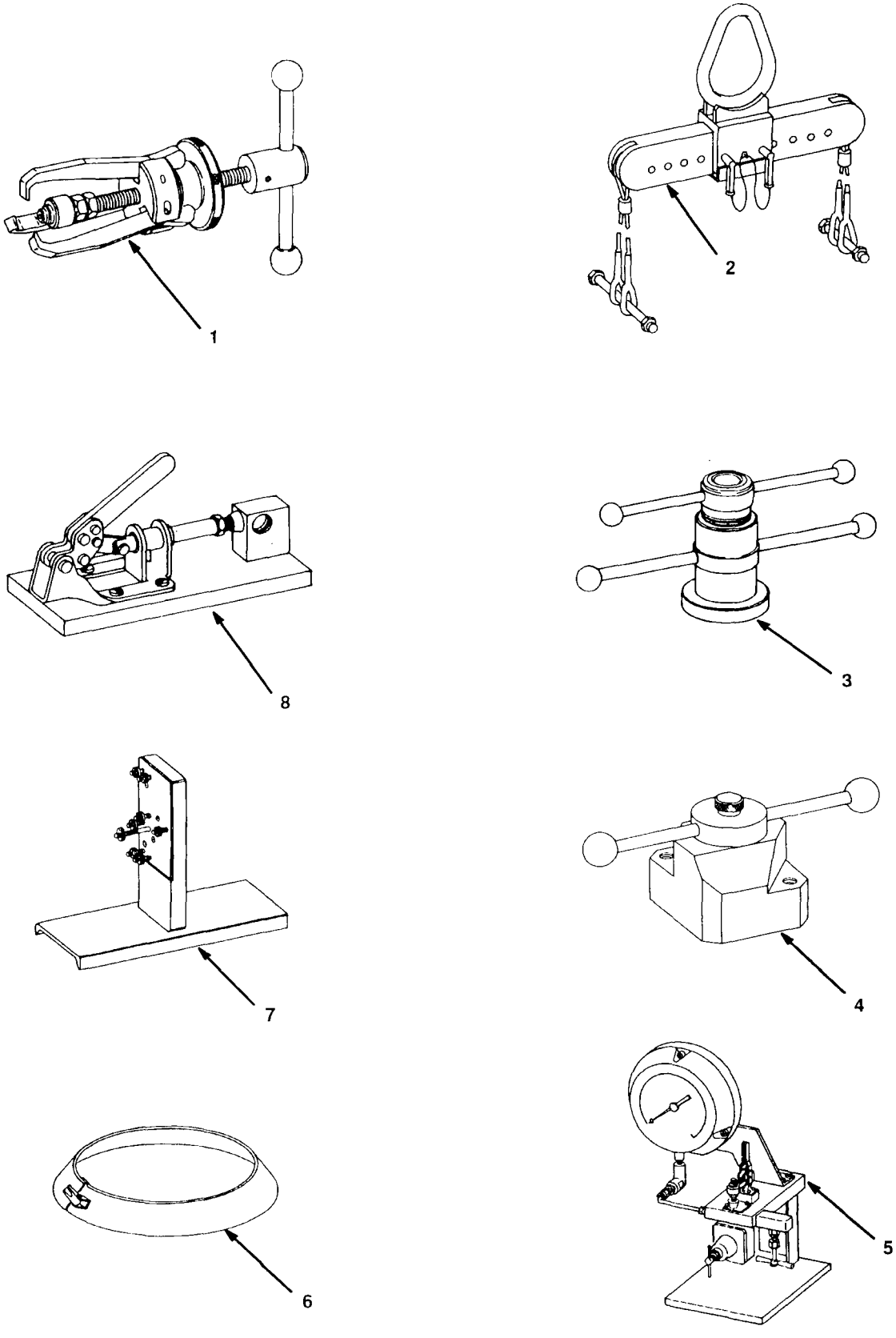

FIGURE 107. SPECIAL TOOLS

(1) ITEM NO	(2) SMR CODE	(3) NSN	(4) CAGEC	(5) PART NUMBER	(6) DESCRIPTION AND USABLE ON CODE (UOC)	(7) QTY
					GROUP 8100 SPECIAL TOOLS LIST	
					FIG. 107 SPECIAL TOOLS	
1	PFDZZ	5120-00-923-3458	91547	LTCT752	PULLER,MECHANICAL BOI:1 PER 1-75 END ITEMS	
2	PAOZZ	1730-00-903-5019	91547	LTCT773	SLING,AIRCRAFT MAIN BOI:1 PER 10-25 END ITEMS	
3	PFDZZ	5120-00-761-8988	91547	LTCT791	TOOL,INSTALL,BEARIN BOI:1 PER 1-75 END ITEMS	
4	PFDZZ	5120-00-670-0432	91547	LTCT818	PULLER BOI:1 PER 1-75 END ITEMS	
5	PFDZZ	4920-00-955-0030	91547	LTCT859	FIXTURE,TEST,VALVE BOI:1 PER 1-75 END ITEMS	
6	PBOZZ	1730-00-780-4406	91547	LTCT862	PROTECTOR,ENGINE,IN SERVICING BOI:1 PER 10-25 END ITEMS	
7	PFDZZ	4920-00-757-4865	91547	LTCT865	STAND,MOUNTING PRES BOI:1 PER 1-75 END ITEMS	
8	PFDZZ	4920-00-909-4187	91547	LTCT896	FIXTURE,HOLDING,PLU BOI:1 PER 1-75 END ITEMS	
					END OF FIGURE	

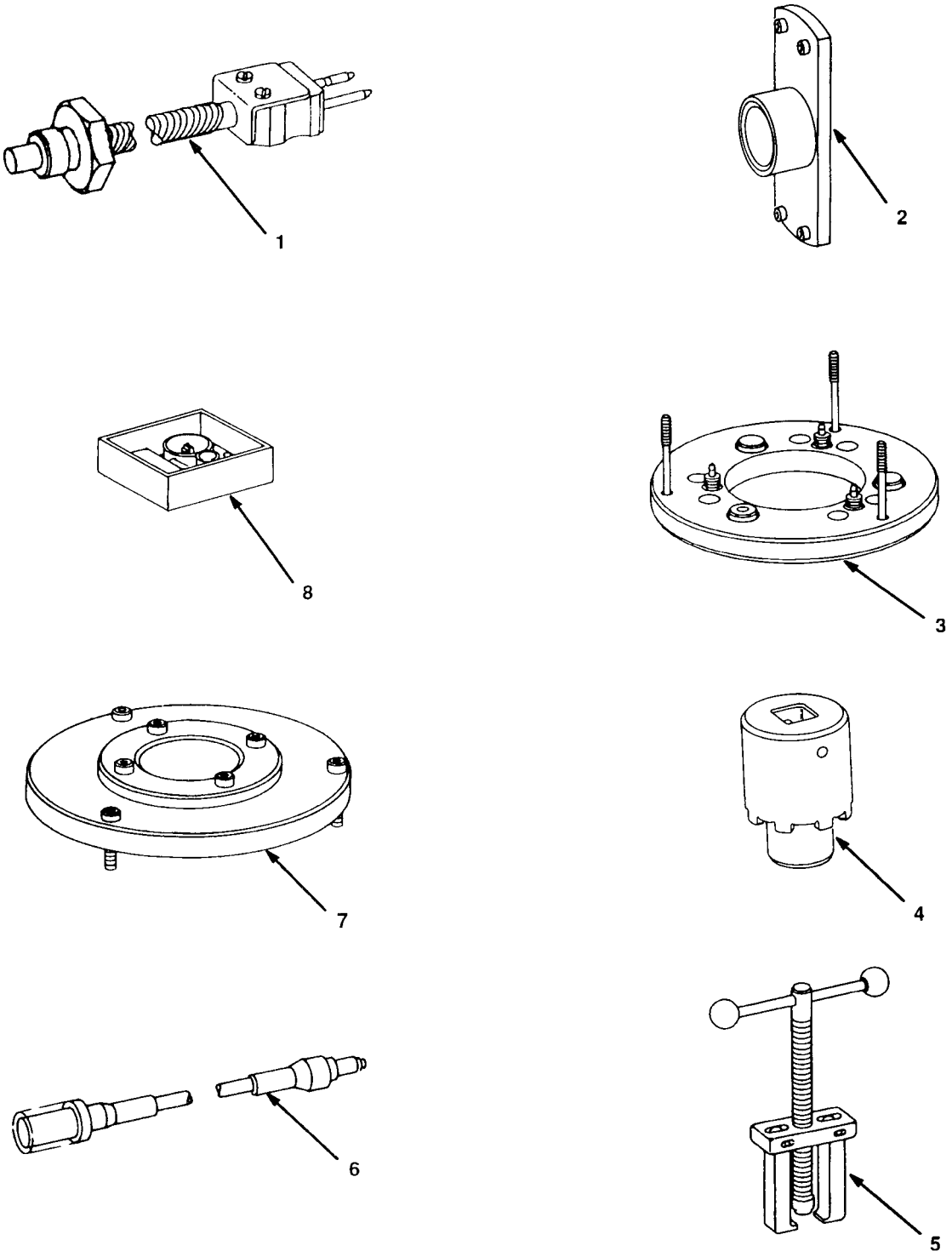

FIGURE 108. SPECIAL TOOLS

(1) ITEM NO	(2) SMR CODE	(3) NSN	(4) CAGEC	(5) PART NUMBER	(6) DESCRIPTION AND USABLE ON CODE (UOC)	(7) QTY
					GROUP 8100 SPECIAL TOOLS LIST	
					FIG. 108 SPECIAL TOOLS	
1	XDDZZ		91547	LTCT9043-01	THERMOCOUPLE,IMMERS BOI:1 PER 1-75 END ITEMS	
2	PFDZZ	4920-00-824-1338	91547	LTCT911	SUPPORT ASSY,SPANNE BOI:1 PER 1-75 END ITEMS	
3	PFDZZ	4920-00-923-2775	91547	LTCT912	FIXTURE,AIRCRAFT MA BOI:1 PER 1-75 END ITEMS	
4	PAOZZ	5120-00-923-3433	91547	LTCT915	SOCKET,WRENCH,FACE BOI:1 PER 1-50 END ITEMS	
5	PFDZZ	5120-00-919-2377	91547	LTCT916	PULLER,MECHANICAL BOI:1 PER 1-75 END ITEMS	
6	XDDZZ		91547	LTCT9297	LEAD,TEST BOI:1 PER 1-75 END ITEMS	
7	PBOZZ	5120-00-923-3414	91547	LTCT962	PLATE,LOCKING,POWER BOI:1 PER 1-50 END ITEMS	
8	PFDZZ	5210-00-257-1131	91547	LTCT9896	GAGE,SPLINE WEAR BOI:1 PER 1-75 END ITEMS	
					END OF FIGURE	

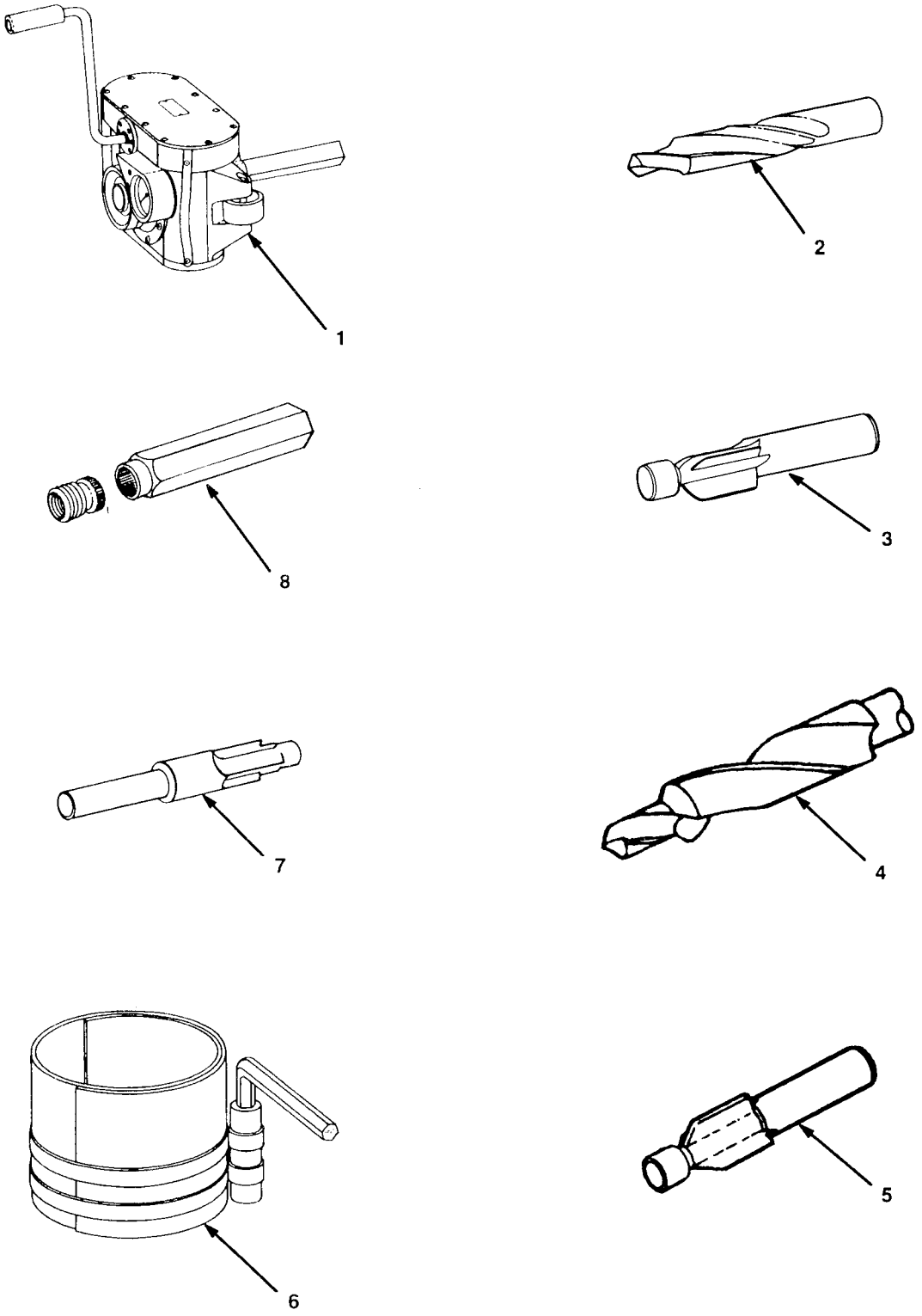

FIGURE 109. SPECIAL TOOLS

(1) ITEM NO	(2) SMR CODE	(3) NSN	(4) CAGEC	(5) PART NUMBER	(6) DESCRIPTION AND USABLE ON CODE (UOC)	(7) QTY
					GROUP 8100 SPECIAL TOOLS LIST	
					FIG. 109 SPECIAL TOOLS	
1	PAFFF	5120-00-482-2543	92059	PD2501	MULTIPLIER,TORQUE W SEE SECTION 2 FIG. 73 FOR BREAKDOWN BOI:1 PER 10-25 END ITEMS	
2	PBFZZ	5133-00-177-7268	83324	RCADC28-312	COUNTERSINK BOI:1 PER 1 - 20 END ITEMS	
2	PBFZZ	5133-00-177-7269	83324	RCADC38-484	COUNTERSINK BOI:1 PER 1 - 20 END ITEMS	
3	PBFZZ	5133-00-116-2774	83324	RCADC56-641S	DRILL,TWIST U/W R1111W,R210D BOI:1 PER 1-50 END ITEMS	
4	PBFZZ	5133-00-116-2793	83324	RCAD38-453	DRILL,TWIST U/W R1108W,R1707D BOI:1 PER 1-50 END ITEMS	
5	PBFZZ	5133-00-116-2820	83324	RCAD47-562	DRILL,TWIST U/W R1110W,R209D BOI:1 PER 1-50 END ITEMS	
5	PBFZZ	5133-00-116-2800	83324	RCAD56-687	DRILL,TWIST U/W R1111W,R1711D BOI:1 PER 1-50 END ITEMS	
6	PFDZZ	5120-00-250-6055	55719	RC40C	COMPRESSOR,PISTON R BOI:1 PER 1-75 END ITEMS	
7	PAOZZ	5133-00-419-9680	83324	RZA12112PT	COUNTEBORE,MACHINE BOI:1 PER 1-50 END ITEMS	
8	PBFZZ	5120-00-381-9126	76689	R1106W	WRENCH,INSERT AND S BOI:1 PER 1-50 END ITEMS	

END OF FIGURE

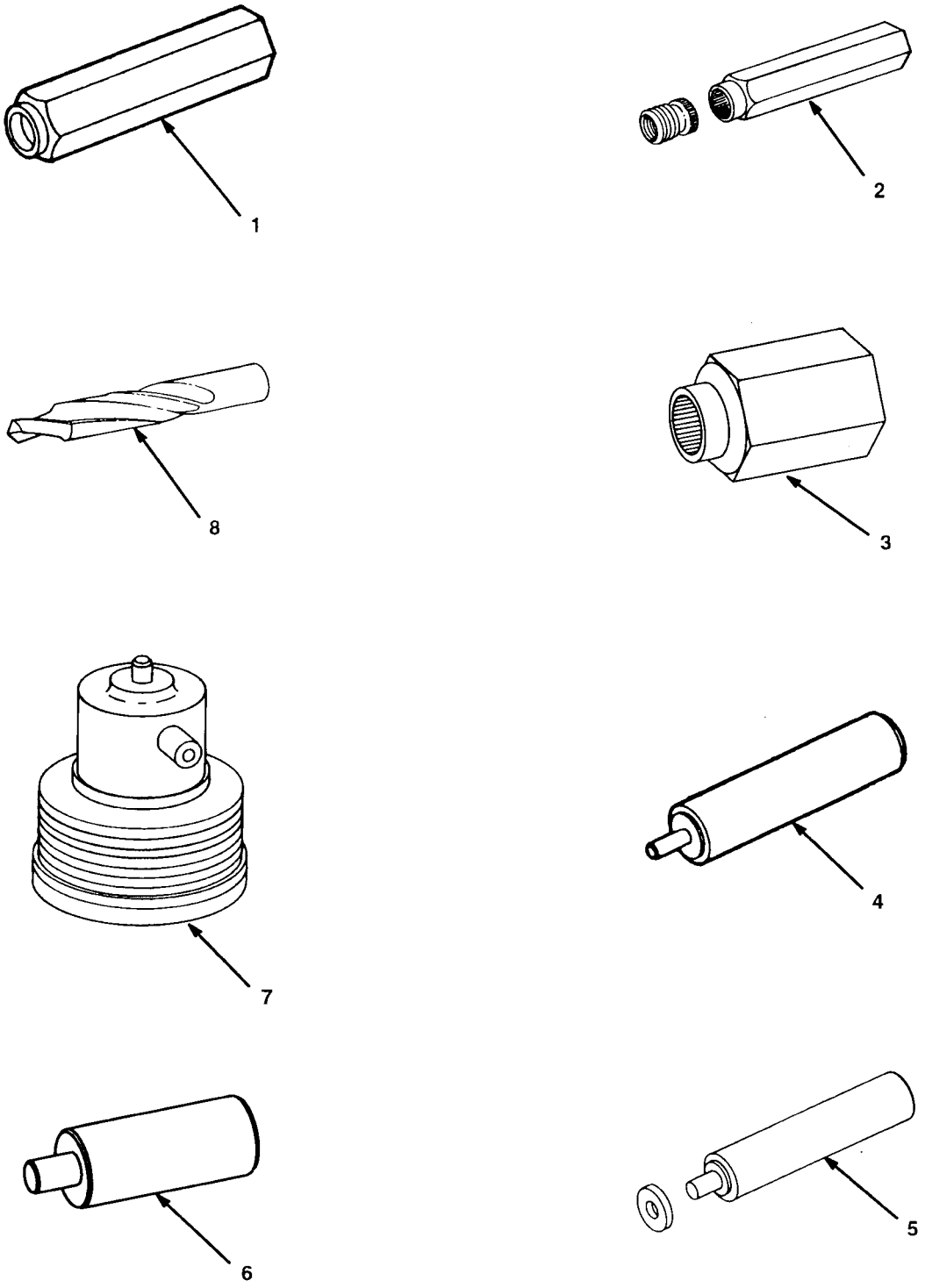

FIGURE 110. SPECIAL TOOLS

(1) ITEM NO	(2) SMR CODE	(3) NSN	(4) CAGEC	(5) PART NUMBER	(6) DESCRIPTION AND USABLE ON CODE (UOC)	(7) QTY
					GROUP 8100 SPECIAL TOOLS LIST	
					FIG. 110 SPECIAL TOOLS	
1	PBFZZ	5120-00-473-7702	83324	R1108W	WRENCH INSERT U/W R1707SX8 & RJ208SX10 BOI:1 PER 1-50 END ITEMS	
2	PBFZZ	5120-00-473-7703	83324	R1110W	WRENCH INSERT BOI:1 PER 1-50 END ITEMS	
3	PBFZZ	5120-00-776-1837	83324	R1111W	WRENCH,INSERTS U/W RJ210SX16,R1711SX9 & R210SX12 BOI:1 PER 1-50 END ITEMS	
4	PBFZZ	5120-00-169-0122	83324	R1707D	TOOL,LOCK RING U/W R1707SX8,RCA38-453, R1108W,RLRR38SU7,RL38SU7 BOI:1 PER 1-50 END ITEMS	
4	PBFZZ	5120-00-169-0123	83324	R1711D	TOOL,LOCK RING U/W R1711SX9,RCA56-687 BOI:1 PER 1-50 END ITEMS	
5	PBFZZ	5120-00-473-7013	83324	R206D	INSERTER,BEARING AN BOI:1 PER 1-50 END ITEMS	
5	XDFZZ		83324	R208D	DRIVER,BEARING AND BOI:1 PER 1-50 END ITEMS	
5	XDFZZ		83324	R209D	INSERTER,BEARING AN BOI:1 PER 1-50 END ITEMS	
6	PBFZZ	5120-00-473-7017	83324	R210D	INSERTER,BEARING AN U/W RJ210SX16,R210SX12,R1111W,RCAC56-641 & RCADC56-641 BOI:1 PER 1-50 END ITEMS	
7	PBOZZ	2945-00-893-5601	94592	SPT107	CLEANER,OIL FILTER BOI:1 PER 10-25 END ITEMS	
8	PBFZZ	5133-00-782-4231	83324	SRW25D	DRILL,TWIST BOI:1 PER 1 - 20 END ITEMS	
					END OF FIGURE	

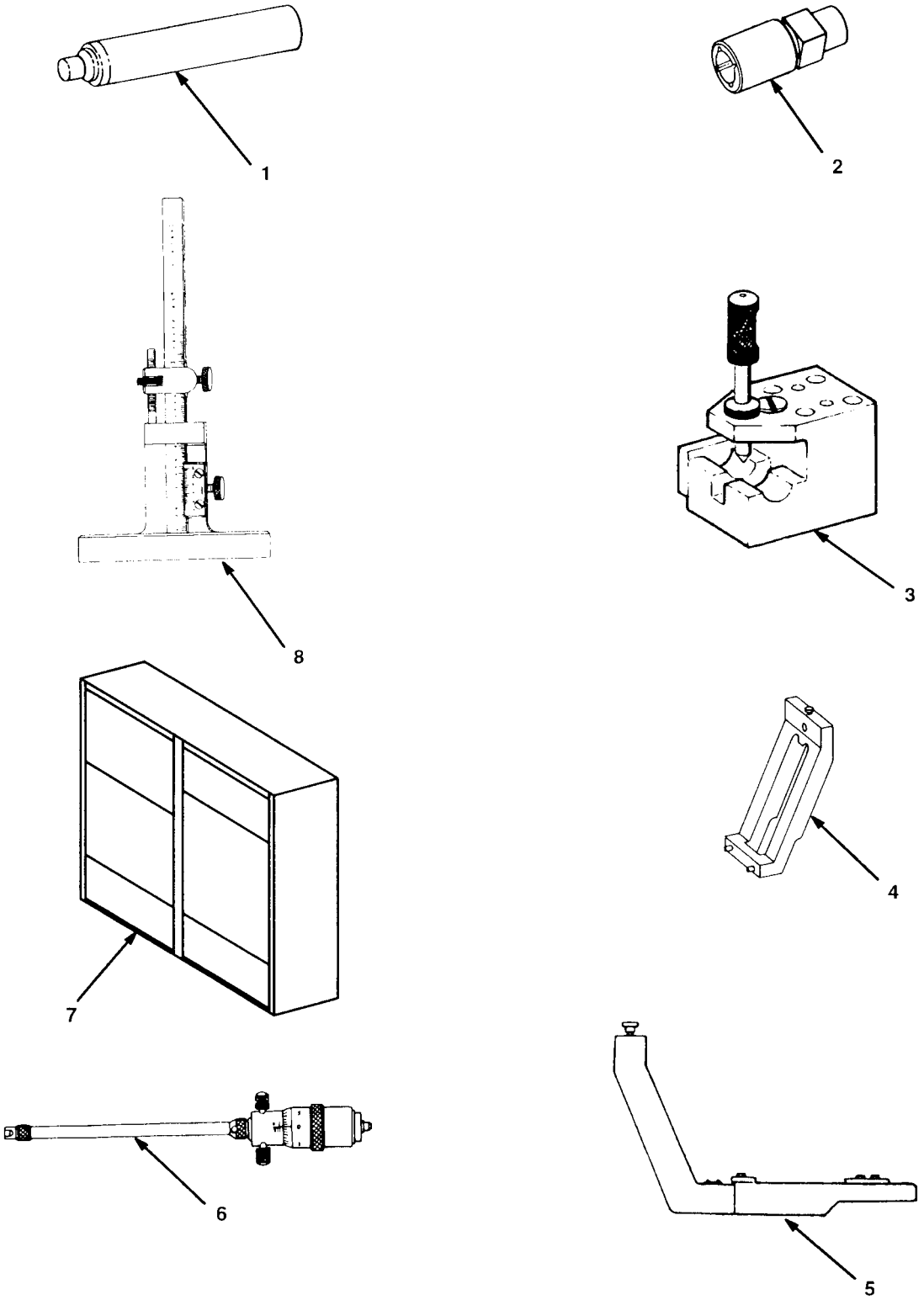

FIGURE 111. SPECIAL TOOLS

GROUP 8100 SPECIAL TOOLS LIST

FIG. 111 SPECIAL TOOLS

(1) ITEM NO	(2) SMR CODE	(3) NSN	(4) CAGEC	(5) PART NUMBER	(6) DESCRIPTION AND USABLE ON CODE (UOC)	(7) QTY
1	PBFZZ	5120-00-177-9529	88324	SRW25SA	SWAGING TOOL,INSERT BOI:1 PER 1-50 END ITEMS	
2	PBFZZ	5120-00-169-0124	83324	SR25W4A	WRENCH,INSERT BOI:1 PER 1-50 END ITEMS	
3	PFDZZ	4920-00-923-2558	11559	STD64568	FIXTURE,ASSEMBLING BOI:1 PER 1-75 END ITEMS	
4	PBOZZ	4920-00-062-9531	87641	SWE13852-1210	ADAPTER,ARM,ENGINE BOI:1 PER 10-25 END ITEMS	
5	PBOZZ	4920-00-979-8932	87641	SWE13852-1510	ADAPTER,ENGINE BASE BOI:1 PER 10-25 END ITEMS	
6	PBFZZ	5210-00-619-3647	60998	10-0833-00	CALIPER,MICROMETER, BOI:1 PER 1-50 END ITEMS	
7	XDDDD		77890	11-4700-02	TEST SET,JET IGNITI SEE SECTION 2 FIG. 74 FOR BREAKDOWN BOI:1 PER 1-75 END ITEMS	
8	PBFZZ	5210-00-274-2861	95683	41G153	GAGE,DEPTH,VERNIER BOI:1 PER 1-50 END ITEMS	

END OF FIGURE

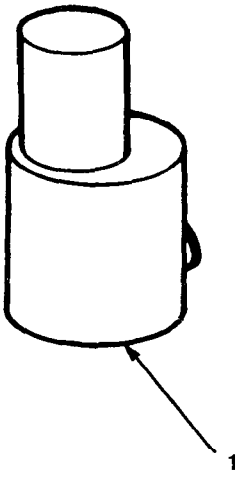

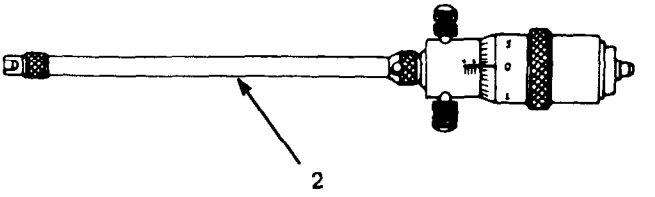

FIGURE 112. SPECIAL TOOLS

(1) ITEM NO	(2) SMR CODE	(3) NSN	(4) CAGEC	(5) PART NUMBER	(6) DESCRIPTION AND USABLE ON CODE (UOC)	(7) QTY
					GROUP 8100 SPECIAL TOOLS LIST	
					FIG. 112 SPECIAL TOOLS	
1	PAOZZ	4920-01-296-7258	81996	4920T53-002	FIXTURE,AIRCRAFT MA BOI:1 PER 10-25 END ITEMS UOC:EZP	
2	PFDZZ	5210-00-570-9775	09058	599-130-3	CALIPER,MICROMETER BOI:1 PER 1-75 END ITEMS	
2	PFDZZ	5210-00-570-9776	09058	599-140-3	CALIPER,MICROMETER BOI:1 PER 1-75 END ITEMS	
					END OF FIGURE	

CROSS-REFERENCE INDEXES

NATIONAL STOCK NUMBER INDEX

STOCK NUMBER	FIG.	ITEM
4920–00–001–9343	79	4
5365–00–003–1165	67	16
5330–00–003–9157	53	27
4730–00–007–2122	47	1
3020–00–010–5511	37	19
3020–00–010–5512	37	47
2840–00–010–7864	18	20
4920–00–011–8940	101	5
2840–00–012–3284	25	7
5315–00–013–8505	21	1
5365–00–014–5867	26	31
2840–00–015–6935	6	7
2840–00–015–6936	6	5
5365–00–016–2894	6	4
5365–00–016–2915	6	4
5365–00–016–2916	6	4
5365–00–016–2917	6	4
5365–00–016–2918	6	4
5365–00–016–2919	6	4
5365–00–016–2921	6	4
5365–00–016–2923	6	4
5365–00–016–2933	6	4
5365–00–016–2934	6	4
5365–00–017–2675	6	8
5330–00–020–0105	10	16
	31	9
5330–00–020–0186	2	9
	20	12
	31	24
	33	19
5330–00–020–0203	2	10
	4	9
	15	34
	16	39
	31	7
	47	26
	51	7
	52	2
	61	10
4920–00–020–2687	80	3
5310–00–021–9105	56	5
5330–00–023–7623	32	13
4920–00–025–9074	105	1
4920–00–034–5875	92	2
4920–00–034–5879	101	2
5120–00–034–6193	100	3
5340–00–036–9204	21	8
5365–00–041–3420	11	33
	17	2
5330–00–045–9714	26	13
5307–00–051–9781	35	2
9905–00–052–4392	59	2
4810–00–052–4394	59	16
4810–00–052–4395	59	20
4810–00–052–4396	59	19
5360–00–052–4398	59	18
5305–00–052–8874	58	6

STOCK NUMBER	FIG.	ITEM
5120–00–053–2603	76	8
4920–00–054–0979	75	8
5306–00–054–1435	39	1
5365–00–054–3579	11	35
	17	36
5305–00–055–2797	20	34
	46	7
2915–00–056–2349	54	23
5310–00–059–9265	58	15
5120–00–062–0107	106	8
5330–00–062–4405	40A	11
	41A	9
2840–00–062–4406	40A	12
	41A	10
4920–00–062–9531	111	4
5365–00–064–9434	51	32
	57	15
5310–00–064–9437	31	20
5310–00–064–9438	31	27
5305–00–065–1461	59	1
4320–00–065–5500	63	23
5340–00–065–5501	63	11
4820–00–065–5502	63	28
4320–00–065–5503	63	22
4320–00–065–5504	63	16
4320–00–065–5505	63	9
4320–00–065–5507	63	36
4320–00–065–5508	63	24
3120–00–065–5533	63	21
3120–00–065–5535	63	25
3120–00–065–5536	63	15
5307–00–066–0562	34	5
5310–00–066–4289	2	2
	4	19
	46	3
	47	22
	51	3
	55	1
	57	12
	60	5
5365–00–066–5279	17	3
5365–00–067–7398	44	3
4320–00–067–8128	61	3
5340–00–067–8304	6	19
3120–00–067–8320	91	3
3120–00–067–8321	91	1
3120–00–067–8324	91	8
3120–00–067–8326	91	8
3120–00–067–8328	91	8
3120–00–067–8329	91	8
3120–00–067–8330	91	8
5120–00–067–8331	91	7
5330–00–067–9994	62	7
5305–00–068–5398	49	7
5305–00–068–5414	26	24
4810–00–068–6712	3	12
4720–00–069–1525	2	5

CROSS-REFERENCE INDEXES

NATIONAL STOCK NUMBER INDEX

STOCK NUMBER	FIG.	ITEM
4920–00–070–1162	101	4
5305–00–071–1320	20	8
	40	19
	41	18
4920–00–071–4553	91	2
5120–00–071–4555	91	4
5120–00–071–4556	91	5
3120–00–071–4569	91	8
3120–00–071–4571	91	8
3120–00–071–8260	91	1
3120–00–071–8261	91	1
3120–00–071–8263	91	1
3120–00–071–8264	91	1
5945–00–072–1060	54	26
4730–00–072–4411	49	5
5120–00–073–8321	67	3
3040–00–073–8508	67	4
4920–00–075–0025	99	5
1650–00–075–1182	53	7
5360–00–075–1183	53	8
2915–00–075–1184	53	9
2915–00–075–1185	53	6
5360–00–075–1187	54	28
4920–00–078–2410	81	8
5340–00–078–3619	46	10
5310–00–079–1967	47	10
	51	9
4920–00–079–8816	103	2
5998–00–079–8822	67	9
5995–00–079–8885	67	7
3110–00–080–7606	32	5
5306–00–080–9395	49	15
5120–00–082–0408	67	8
3120–00–082–0429	67	5
5306–00–082–0857	32	17
	55	18
5310–00–083–8364	42	22
2840–00–084–7761	39	19
4920–00–085–2340	103	3
5360–00–087–3459	10	14
4810–00–087–7692	49	4
5330–00–088–0007	3	11
5310–00–088–8008	10	18
4920–00–089–2295	96	2
5310–00–089–7208	19	11
5307–00–091–9220	21	2
4730–00–102–8542	16	31
4920–00–102–8546	76	6
5340–00–103–2945	46	4
	47	15
	57	2
5365–00–103–5870	19	4
5305–00–105–0531	5	4
2840–00–105–3011	20	11
4920–00–105–3033	101	8
5365–00–105–3887	38	1
4730–00–105–9321	38	3
2840–00–106–0067	29	4
	30	1
4920–00–106–0074	77	2
4730–00–106–0091	53	32
5935–00–106–0096	57	8
2840–00–106–2360	29	6
	30	3
5330–00–110–8521	3	19
4810–00–111–3012	59	9
4810–00–111–3013	59	11
4810–00–111–3014	59	4
5970–00–111–3019	59	8
4810–00–111–3020	59	7
5330–00–111–3713	40	5
4810–00–111–5356	59	15
5360–00–113–0918	59	12
4920–00–113–9813	105	4
5360–00–115–1323	41A	2
5133–00–116–2774	109	3
5133–00–116–2793	109	4
5133–00–116–2800	109	5
5133–00–116–2820	109	5
4920–00–119–1075	100	4
4920–00–119–1077	77	5
5280–00–129–6099	105	5
2840–00–130–5960	42	18
5220–00–131–1995	91	6
5220–00–132–4930	106	4
5120–00–132–4931	106	2
4710–00–134–0063	47	3
4820–00–134–1113	47	32
2915–00–134–1114	47	4
2840–00–134–4803	1	1
5330–00–134–7672	24	6
3415–00–134–8128	77	4
4920–00–135–4630	76	5
5120–00–136–4993	80	7
5306–00–143–2297	32	34
5330–00–143–8648	32	10
5330–00–143–8769	24	11
5306–00–144–3649	4	15
	5	23
5340–00–145–7961	32	14
5315–00–150–3635	12	1
	23	12
	26	4
	28	1
5305–00–150–9269	53	33
5210–00–152–0104	73	4
5120–00–152–1990	73	2
5120–00–152–1992	73	3
5930–00–156–3380	66	1
5120–00–156–8671	80	5
3460–00–156–8702	104	8
4920–00–156–8707	104	6
5365–00–156–8958	19	6
5310–00–159–6339	15	33

CROSS-REFERENCE INDEXES

NATIONAL STOCK NUMBER INDEX

STOCK NUMBER	FIG.	ITEM
5330–00–165–1936	6	3
5330–00–165–1941	3	7
5330–00–165–1948	61	4
5330–00–165–1950	10	26
5330–00–165–1953	16	11
5330–00–165–1955	16	5
5330–00–166–0963	26	36
5330–00–166–0967	33	32
	42	24
5330–00–166–0969	15	2
	16	15
	38	4
	46	6
5330–00–166–0980	36	3
	43	16
5330–00–166–0988	39	6
	42	6
	62	16
5330–00–166–0990	37	3
	37	42
	39	5
	42	9
	62	17
	63	7
5330–00–166–0991	42	8
	63	8
5330–00–166–0992	50	4
	54	30
5330–00–166–0993	16	4
5330–00–166–1001	16	25
5330–00–166–1020	32	11
5330–00–166–1022	32	29
5330–00–166–1062	51	24
5330–00–166–1063	31	6
	61	5
5330–00–166–1066	61	6
5330–00–166–8390	63	12
5330–00–166–8396	32	24
5330–00–166–8404	3	10
5310–00–167–0805	47	9
5310–00–167–0812	8	2
	43	4
5310–00–167–0814	40A	8
	41A	6
5310–00–167–0818	10	5
5310–00–167–0820	7	7
5310–00–167–0834	4	14
	5	21
	37	25
	51	28
	61	2
5310–00–167–0835	3	5
	4	3
	6	2
	7	13
	10	23
	32	15
	33	21
	36	8
	39	8
	61	12
5310–00–167–0836	51	13
5310–00–167–0837	7	19
	16	2
	31	18
5330–00–167–5111	31	1
	61	14
5330–00–167–5116	39	16
5330–00–167–5119	31	5
5330–00–167–5126	36	2
5331–00–167–5126	40	3
	41	3
5330–00–167–5135	10	25
5330–00–167–5166	38	2
	60	8
5307–00–168–2926	34	8
5120–00–169–0122	110	4
5120–00–169–0123	110	4
5120–00–169–0124	111	2
5305–00–174–0593	17	13
5306–00–174–4683	61	1
5340–00–176–0681	62	14
5360–00–176–0860	24	12
	24	12
2840–00–176–3579	24	1
2840–00–176–3580	24	3
2945–00–176–3682	62	5
2840–00–176–3751	11	27
	14	21
2840–00–176–3752	11	23
	14	14
2840–00–176–3756	11	25
	14	16
2840–00–176–3758	11	24
	14	15
2840–00–176–3759	11	26
	14	17
2840–00–176–3773	11	25
	14	16
2840–00–176–3780	11	11
	14	2
2840–00–176–3782	11	26
	14	17
2840–00–176–3788	11	11
	14	2
2840–00–176–3789	11	23
	14	14
2840–00–176–3791	11	24
	14	15
4320–00–176–4119	63	17
5310–00–176–6179	11	29
	11	31
	14	19
4920–00–176–8410	78	4

CROSS-REFERENCE INDEXES

NATIONAL STOCK NUMBER INDEX

STOCK NUMBER	FIG.	ITEM
4920–00–176–8421	78	3
4820–00–176–9233	62	12
5340–00–177–4116	55	6
5306–00–177–5559	61	9
5306–00–177–5571	51	30
	57	16
5306–00–177–5712	11	28
	11	32
	14	20
5306–00–177–5723	11	8
	14	26
5133–00–177–7268	109	2
5133–00–177–7269	109	2
5120–00–177–9529	111	1
5365–00–178–1455	24	14
5330–00–179–1224	37	23
5330–00–179–4207	47	14
5340–00–181–1225	11	12
	11	22
	14	3
	14	13
5340–00–181–1669	47	31
3465–00–181–2745	78	7
4730–00–182–9021	2	8
3110–00–183–7537	54	27
5310–00–184–8966	63	4
4730–00–188–3493	16	35
5330–00–194–1675	40A	26
	41A	24
4720–00–195–9789	60	6
5310–00–198–4759	20	5
4810–00–198–8611	59	5
5305–00–206–6814	40	1
	41	1
5306–00–207–9725	37	24
5306–00–211–9185	31	26
4730–00–221–2134	16	37
3465–00–221–4975	77	7
5307–00–226–3909	34	2
3020–00–226–6215	37	45
4920–00–228–1685	105	3
4920–00–228–1834	106	5
5210–00–228–8821	103	4
5310–00–228–8907	59	13
5306–00–229–0355	3	6
	39	15
	42	12
2840–00–234–6292	27	4
2840–00–234–7225	18	19
2840–00–234–7226	18	15
5310–00–234–7821	25	4
5330–00–235–0237	47	2
6685–00–235–4593	75	3
6685–00–235–4594	75	2
5306–00–239–7798	6	18
5306–00–239–7799	6	17
5315–00–241–2920	16	27
	37	22
	38	10
5360–00–241–5298	62	13
3465–00–243–3662	78	8
5330–00–248–3833	53	19
5330–00–248–3835	52	3
	53	13
5330–00–248–3836	53	24
5330–00–248–3837	54	7
5330–00–248–3838	54	33
5330–00–248–3840	50	13
	54	32
5330–00–248–3842	50	8
5330–00–248–3843	54	31
5306–00–248–5888	31	22
5330–00–250–0236	53	10
5120–00–250–6055	109	6
4920–00–252–2636	81	3
4920–00–252–2726	81	3
4920–00–252–2727	81	4
5330–00–252–6048	50	7
2840–00–253–1667	17	22
4920–00–253–1705	81	2
4920–00–253–1706	76	7
5330–00–253–1722	19	7
	22	6
	26	15
5305–00–253–5603	63	1
5305–00–253–5612	15	5
5210–00–257–1131	108	8
5306–00–259–1054	3	16
	36	9
	60	17
5306–00–259–1056	36	7
5330–00–263–8011	53	11
5330–00–263–8028	54	3
5306–00–263–8645	42	27
5330–00–265–1088	53	14
	53	39
5305–00–271–3550	17	31
5305–00–271–5222	50	1
5305–00–271–7746	2	6
	57	10
5210–00–274–2861	111	8
5310–00–275–0787	20	5
5315–00–276–0112	44	5
5305–00–276–2123	57	17
5315–00–276–6766	16	20
5305–00–281–8540	57	17
5306–00–281–9541	26	8
5306–00–281–9549	40A	14
	41A	12
5365–00–282–2431	16	17
5306–00–282–8637	40	18
	41	17
5315–00–283–0850	16	23
	35	4

CROSS-REFERENCE INDEXES

NATIONAL STOCK NUMBER INDEX

STOCK NUMBER	FIG.	ITEM
5305–00–286–0214	57	17
5340–00–286–6600	9	5
5365–00–289–3019	16	40
5365–00–289–3073	15	3
5340–00–290–4480	38	11
	40	28
	41	25
5340–00–290–4497	16	28
	35	11
	40	26
	41	23
	62	10
5340–00–290–4501	35	12
5340–00–290–4511	16	33
5340–00–291–3484	3	2
	10	3
	34	7
5340–00–291–3492	16	6
5340–00–291–3493	35	10
5306–00–298–2808	8	1
5340–00–331–5106	62	9
5306–00–340–4560	49	2
	55	13
5365–00–350–6224	24	14
5120–00–381–9126	109	8
5306–00–400–0048	42	23
3120–00–400–2784	89	8
4920–00–402–8424	80	4
3120–00–403–2873	44	6
4920–00–403–7786	79	3
4730–00–404–3377	48	7
5365–00–405–7576	37	31
5120–00–409–9121	104	1
5120–00–409–9122	81	6
5330–00–410–8153	40	4
	41	4
5305–00–410–9355	20	13
5330–00–411–4436	48	6
5305–00–412–4448	26	20
5133–00–419–9680	109	7
4920–00–420–0882	103	7
5340–00–420–1747	2	7
	47	20
	55	3
5315–00–436–5012	59	10
5365–00–437–4013	11	42
5310–00–443–9972	59	14
4920–00–444–2362	81	5
5365–00–445–6237	43	18
5120–00–446–1585	102	1
5120–00–446–1586	102	4
2945–00–446–6446	62	8
5306–00–446–6471	19	12
5310–00–446–6479	62	3
5306–00–446–6481	62	2
2840–00–446–8909	18	13
2840–00–448–9580	67	6
2840–00–456–0906	18	12
5306–00–457–9896	17	29
5365–00–458–2613	31	23
2840–00–462–8869	27	2
5330–00–462–8883	27	1
2840–00–472–8686	37	4
3110–00–472–9966	37	38
5120–00–473–7013	110	5
5120–00–473–7017	110	6
4920–00–473–7589	102	2
5120–00–473–7591	102	3
5120–00–473–7702	110	1
5120–00–473–7703	110	2
5307–00–474–8480	35	2
2840–00–474–9712	25	23
4730–00–475–0052	33	9
	37	10
2840–00–475–0053	33	16
2840–00–475–0055	32	31
2840–00–475–0056	32	30
5365–00–475–0057	32	32
3040–00–475–0058	33	24
5365–00–475–0067	6	28
	11	4
5315–00–475–1933	16	19
4730–00–475–2038	33	25
5365–00–475–5441	56	6
5310–00–475–5442	32	1
4730–00–475–6950	11	48
	14	23
4710–00–475–6968	16	14
5330–00–475–6972	33	29
2840–00–475–6980	43	15
5307–00–475–9621	35	2
5220–00–481–3114	79	2
5120–00–482–2543	109	1
2945–00–482–9071	10	15
4920–00–484–3952	76	1
4920–00–484–3954	92	4
5365–00–486–8077	56	8
5330–00–486–8080	56	7
4920–00–491–0840	102	5
5995–00–491–7108	68	1
5360–00–492–3218	67	15
2840–00–492–4442	11	19
	14	10
2840–00–492–4443	11	17
	14	8
2840–00–492–4447	11	18
	14	9
2840–00–492–4448	11	20
	14	11
2840–00–494–5492	25	6
4920–00–495–6592	80	8
5120–00–509–2965	80	1
5310–00–515–7449	52	7
	53	34

CROSS-REFERENCE INDEXES

NATIONAL STOCK NUMBER INDEX

STOCK NUMBER	FIG.	ITEM
5310–00–515–7592	40A	15
	41A	13
5220–00–522–2268	106	7
2840–00–522–2351	36	1
5315–00–522–2358	7	15
4920–00–522–3788	78	1
4920–00–522–3797	78	1
5365–00–527–1492	63	14
5365–00–530–5898	40A	28
	41A	26
5330–00–531–2068	37	43
5310–00–531–9515	4	4
	6	21
	42	26
	53	3
5340–00–533–3505	57	11
5360–00–533–3805	10	29
2840–00–533–3814	37	15
2840–00–533–3822	37	26
5360–00–533–3856	10	6
3040–00–533–3869	37	9
3040–00–533–3870	37	32
2840–00–537–2010	37	1
5306–00–537–2033	8	3
5305–00–537–2038	37	6
5330–00–537–3929	32	4
5305–00–543–2753	47	12
	54	20
5315–00–543–3033	25	2
5305–00–543–4517	49	6
5310–00–550–4271	54	12
5330–00–551–8252	5	14
5330–00–551–9574	5	11
5310–00–560–3173	54	11
5210–00–570–9775	112	2
5210–00–570–9776	112	2
2840–00–570–9803	17	15
5330–00–570–9811	51	14
5340–00–579–1531	47	5
5330–00–579–7548	37	41
3110–00–580–3254	33	17
	37	12
3110–00–580–3268	32	9
5330–00–580–5939	40	16
	41	15
6685–00–580–9651	61	18
5330–00–582–7478	5	9
2840–00–587–3622	33	28
3040–00–587–3749	33	23
2840–00–587–7090	37	2
5365–00–587–7091	37	28
	38	9
5365–00–590–0542	37	13
5340–00–597–3302	9	4
	10	2
	16	29
	34	3
	35	13
	38	7
	44	4
5340–00–598–5634	16	21
5340–00–600–0726	54	18
2915–00–600–6618	53	22
2840–00–600–6650	37	16
5340–00–604–1451	16	18
2840–00–605–5137	7	16
5310–00–613–7435	39	18
5365–00–614–0246	2	4
	46	9
	47	19
	49	3
	51	2
	55	4
	57	1
	60	12
3040–00–618–5828	54	15
5365–00–618–7050	53	12
5306–00–619–1807	16	1
5315–00–619–3275	33	14
5210–00–619–3647	111	6
5315–00–619–4150	16	34
5307–00–619–5328	34	8
5307–00–619–5330	34	8
2840–00–621–1860	1	1
5305–00–622–9476	51	20
5305–00–622–9486	10	19
	55	14
4810–00–625–3900	10	10
5365–00–634–7076	17	4
5307–00–637–8902	37	30
5310–00–639–3586	43	9
5310–00–639–7537	54	21
5330–00–654–8932	31	11
	31	16
5330–00–654–8934	49	16
5305–00–655–6573	10	21
5307–00–655–7156	35	3
5307–00–655–7209	35	3
5365–00–655–7765	26	27
5365–00–655–7766	26	27
5365–00–655–7767	26	27
5365–00–655–7768	26	27
5365–00–655–7769	26	27
5365–00–655–7776	26	27
5365–00–655–7777	26	27
5365–00–655–7778	26	27
5365–00–655–7779	26	27
5365–00–655–7780	26	27
5365–00–655–7781	26	27
5365–00–655–7782	26	27
5365–00–655–7783	26	27
5365–00–655–7784	26	27
5365–00–655–7785	26	27
5365–00–655–7786	26	27

CROSS-REFERENCE INDEXES

NATIONAL STOCK NUMBER INDEX

STOCK NUMBER	FIG.	ITEM
5365–00–655–7787	26	27
5365–00–655–7788	26	27
5365–00–655–7789	26	27
5365–00–655–7790	26	27
5365–00–655–7791	26	27
5365–00–655–8155	39	13
2840–00–656–8523	32	22
2840–00–656–8541	43	12
3130–00–656–8544	34	11
	35	7
3130–00–656–8545	34	9
3130–00–656–8546	35	8
5310–00–656–8547	35	5
2840–00–656–8548	49	12
5340–00–656–8549	60	4
5340–00–656–8550	47	21
	55	11
	60	14
5365–00–656–8579	32	28
5310–00–658–5299	39	2
	61	8
5310–00–658–5308	26	18
4730–00–658–7208	43	17
4710–00–659–9618	42	25
5310–00–660–2896	37	20
5310–00–660–3229	43	21
5306–00–660–3271	31	21
5340–00–664–3092	51	31
5120–00–670–0432	107	4
5310–00–670–1193	32	26
4730–00–670–7339	20	41
3020–00–671–0164	6	29
	11	3
5120–00–671–2129	84	2
5120–00–671–4022	85	1
3040–00–671–5375	54	5
4820–00–676–1883	63	30
5365–00–680–3905	61	23
5310–00–680–5671	37	21
	43	30
5306–00–680–6779	4	18
3110–00–684–1826	33	27
4730–00–684–6912	2	11
	4	11
	31	8
	47	25
	51	6
5310–00–685–3744	51	19
5365–00–687–3379	62	18
5360–00–693–1694	54	14
5305–00–701–5075	54	16
5365–00–701–7321	54	4
5340–00–707–6891	53	18
4920–00–714–1317	75	1
5120–00–716–5479	82	1
4920–00–716–5486	79	8
5120–00–716–5581	76	4

STOCK NUMBER	FIG.	ITEM
2840–00–717–7801	33	22
5305–00–720–8429	2	6
	57	10
5365–00–720–9221	56	1
5365–00–721–4828	16	8
4730–00–722–7214	51	8
4730–00–725–4351	15	32
3110–00–727–3032	6	27
	11	5
	26	26
5120–00–727–4481	92	5
4710–00–727–4563	18	24
2840–00–731–5335	18	17
2840–00–731–5371	18	23
4710–00–731–5495	18	21
2840–00–731–8916	8	4
5306–00–736–1041	16	9
2840–00–736–3979	32	3
5340–00–736–8653	16	7
5330–00–737–5627	10	27
3020–00–739–2589	32	8
3020–00–739–2591	33	13
5306–00–739–6922	39	20
2840–00–739–6927	39	4
5330–00–739–6929	37	46
5310–00–740–3378	32	2
5330–00–753–1064	17	6
5365–00–754–1896	32	6
5310–00–754–3353	43	20
4920–00–757–4865	107	7
5120–00–757–4910	85	2
5306–00–760–7299	6	24
5315–00–760–8219	15	14
5365–00–761–3647	40	6
	41	6
5365–00–761–4179	43	27
5310–00–761–6882	52	6
5120–00–761–8988	107	3
5306–00–763–2581	43	3
4720–00–763–7562	60	11
5315–00–764–8229	63	26
5315–00–765–2853	63	27
3040–00–766–8627	43	10
3040–00–766–8633	61	19
2840–00–766–8645	11	41
	23	19
5365–00–766–8651	19	4
5330–00–766–8653	39	11
	40	24
	41	21
2840–00–769–9901	11	9
	14	27
5330–00–769–9908	18	5
5310–00–770–8360	32	33
	37	17
5365–00–771–7184	26	27
5365–00–771–7185	26	27

CROSS-REFERENCE INDEXES

NATIONAL STOCK NUMBER INDEX

STOCK NUMBER	FIG.	ITEM
5365–00–771–7187	26	27
5365–00–775–2510	19	4
5306–00–775–6235	22	13
2840–00–775–6512	60	9
5360–00–775–6513	49	13
5340–00–775–6514	31	13
	51	4
	57	4
	60	13
4710–00–775–6516	3	8
2840–00–775–6517	51	23
5330–00–775–6523	51	21
5340–00–775–6524	57	14
2840–00–775–6525	51	27
5315–00–775–6553	49	14
5120–00–776–1837	110	3
2840–00–776–7086	60	7
2840–00–776–7093	55	16
5340–00–776–7095	49	1
4920–00–776–7126	75	7
5365–00–777–8163	51	26
5120–00–778–0661	89	5
5307–00–779–7295	34	5
5307–00–779–7296	34	5
5307–00–779–7297	34	2
3110–00–780–2720	40	20
	41	19
1730–00–780–4406	107	6
5120–00–780–4423	105	2
5120–00–780–4424	100	5
5120–00–780–8379	100	8
5330–00–781–0992	50	5
5305–00–781–5662	15	8
5995–00–782–0636	57	6
2840–00–782–1771	49	9
2915–00–782–3819	47	13
5133–00–782–4231	110	8
2840–00–784–3989	31	4
2840–00–784–3991	32	18
2840–00–784–3993	32	12
5365–00–784–3994	39	9
2840–00–786–1719	32	27
4730–00–786–2992	31	25
2840–00–787–2555	16	16
2840–00–787–2557	16	3
5340–00–787–2558	16	24
5310–00–788–7493	55	15
3442–00–789–5014	103	1
5310–00–790–8116	11	40
	23	18
2840–00–792–6470	18	4
5340–00–794–8179	3	15
	7	10
5365–00–796–4306	53	16
2915–00–796–4308	53	26
5365–00–796–4314	54	29
5340–00–796–4341	53	36
1650–00–796–7083	53	25
5360–00–796–7092	54	6
5365–00–796–9776	19	4
5330–00–802–1360	52	4
2840–00–802–2718	58	13
2840–00–802–2722	58	12
4730–00–803–5049	54	1
4730–00–803–5926	50	2
5365–00–803–7320	3	9
4730–00–803–7981	10	17
5365–00–804–1507	43	11
4730–00–804–1589	31	10
5120–00–804–2629	84	8
5315–00–806–5316	61	21
5310–00–807–1467	5	20
5310–00–807–1468	4	8
	6	1
	32	16
5310–00–807–1468	33	20
	39	7
5310–00–807–1469	7	6
	51	12
5310–00–807–1474	10	4
5310–00–807–1477	31	19
5365–00–807–7968	16	13
4920–00–808–5349	104	7
4920–00–808–5350	104	7
4920–00–808–5365	104	5
5307–00–809–6832	34	2
5315–00–810–6370	34	6
5310–00–811–6419	57	5
5315–00–812–0091	43	2
4730–00–812–5036	4	10
5310–00–814–7325	37	7
5315–00–815–1405	4	17
4920–00–816–6838	86	2
4920–00–816–6848	89	1
4920–00–816–6856	88	7
4920–00–816–6860	89	2
4920–00–816–6871	89	4
5320–00–819–5690	20	24
	20	29
2840–00–821–2759	20	4
3040–00–823–5992	58	10
4920–00–824–1338	108	2
5365–00–825–3767	32	7
5306–00–825–4803	3	17
5120–00–828–3100	92	3
5315–00–828–3234	40	23
5330–00–828–8059	45	5
1650–00–828–8166	53	28
2915–00–828–8167	53	29
5305–00–830–1643	7	8
5365–00–830–4294	37	14
5360–00–831–0274	37	5
5306–00–831–4081	43	22
5310–00–832–8289	21	9

CROSS-REFERENCE INDEXES

NATIONAL STOCK NUMBER INDEX

STOCK NUMBER	FIG.	ITEM
5330–00–832–8448	22	4
5365–00–833–1220	6	28
	11	4
5365–00–833–1221	6	28
	11	4
5365–00–833–1222	6	28
	11	4
5365–00–833–1224	6	28
	11	4
5365–00–833–1225	6	28
	11	4
5365–00–833–1227	6	28
	11	4
5365–00–833–1228	6	28
	11	4
5365–00–833–1229	6	28
	11	4
5365–00–833–1230	6	28
	11	4
2915–00–833–1665	53	31
5365–00–833–3537	6	28
	11	4
5310–00–833–5446	7	14
5365–00–833–6691	37	33
2915–00–834–1550	53	30
5315–00–834–3869	34	10
	35	6
5365–00–834–6402	6	28
	11	4
5365–00–834–6403	6	28
	11	4
5365–00–834–6404	6	28
	11	4
5120–00–834–6711	98	2
5120–00–834–6712	100	2
5120–00–834–6713	100	6
5120–00–834–6714	100	7
4730–00–834–9560	2	11
	4	11
	31	8
	47	25
	51	6
5365–00–837–0856	61	11
5310–00–837–8962	37	37
5365–00–837–9844	17	33
5306–00–838–1618	18	2
4920–00–839–0710	97	5
5120–00–839–0783	76	3
5120–00–839–6913	98	6
5120–00–839–7011	96	6
5120–00–840–9830	95	8
4920–00–841–0188	90	2
4920–00–841–0270	95	3
4920–00–841–0276	99	4
4920–00–841–0277	101	7
4920–00–841–0415	99	7
5120–00–841–9739	98	8

STOCK NUMBER	FIG.	ITEM
2915–00–842–0152	52	5
5310–00–842–0665	37	36
5305–00–842–1938	54	22
4920–00–842–6021	97	3
4920–00–842–6022	87	3
4920–00–842–6038	87	4
5340–00–842–6040	98	5
3460–00–842–6118	94	2
4920–00–842–6126	97	8
4920–00–842–6130	98	3
4920–00–842–6278	100	1
4920–00–842–6325	101	1
5120–00–842–6360	99	8
5310–00–842–7812	37	8
5330–00–843–1507	58	3
5310–00–844–3302	18	1
	47	27
5310–00–844–4872	21	4
	57	7
5305–00–844–5825	52	8
5310–00–844–7569	40	9
	41	9
5310–00–845–0955	10	11
5310–00–845–0956	10	9
5330–00–846–0502	62	4
5310–00–846–1658	40A	6
5305–00–846–1675	33	31
5305–00–846–1676	33	34
5120–00–849–3984	87	3
5220–00–849–4350	90	8
5180–00–851–1461	98	7
5330–00–852–4230	63	32
5315–00–852–7430	40A	4
	41A	4
5306–00–852–8036	17	26
4920–00–854–4519	89	7
4920–00–855–6069	101	6
2840–00–855–6102	25	11
5365–00–856–1115	6	28
	11	4
5365–00–856–7789	20	3
5330–00–857–1457	32	20
5360–00–858–0001	58	9
2840–00–858–8592	20	1
5365–00–858–9431	58	14
2840–00–860–9466	38	5
3130–00–862–4856	37	35
4710–00–862–4862	20	7
5330–00–863–1197	33	6
4920–00–863–3827	94	8
4920–00–863–3832	80	2
4920–00–863–3837	102	8
5365–00–863–5737	37	34
4920–00–864–0463	95	2
4920–00–864–3464	89	3
4920–00–864–3466	84	5
5305–00–866–7248	63	3

CROSS-REFERENCE INDEXES

NATIONAL STOCK NUMBER INDEX

STOCK NUMBER	FIG.	ITEM	STOCK NUMBER	FIG.	ITEM
2995–00–867–6644	10	13		11	2
5995–00–868–1795	57	3	3120–00–897–3792	5	1
5330–00–868–8858	18	29	5305–00–897–6509	33	33
4920–00–871–0222	90	4	5120–00–898–0697	92	7
4920–00–871–0226	95	5	4920–00–898–7925	84	3
4920–00–871–5132	95	6	3110–00–898–9692	42	14
4920–00–871–5133	84	4	5310–00–901–4954	63	10
4730–00–872–6125	31	2	5365–00–902–5601	63	13
2925–00–875–2095	56	3	5365–00–902–5602	63	13
5120–00–875–2588	93	1	5365–00–902–8533	63	13
1660–00–875–3194	59	17	5365–00–902–8534	63	13
4820–00–876–8715	39	12	5310–00–903–4633	25	18
4920–00–878–5205	93	4	5307–00–903–4865	16	22
4920–00–878–5207	97	2	5307–00–903–4866	16	22
4920–00–878–5598	99	6	1730–00–903–5019	107	2
3120–00–878–5604	89	8	1730–00–903–5020	86	8
3120–00–878–5615	89	8	5315–00–903–7349	42	20
5330–00–878–5939	20	14	5360–00–903–8615	63	5
3040–00–878–5940	39	17	2840–00–904–2475	15	11
5120–00–878–6153	93	2	3120–00–904–2479	7	3
2840–00–878–6172	16	12	4730–00–904–9762	46	8
4920–00–878–6173	101	3	3120–00–904–9829	4	13
5310–00–878–7196	20	18	4810–00–906–2326	3	12
5120–00–878–7797	92	8	5310–00–906–3630	9	1
5305–00–879–1447	42	15	5220–00–906–3926	87	1
5340–00–880–7677	93	3	5120–00–906–8056	85	5
5365–00–882–1658	33	30	2995–00–906–9710	58	16
4920–00–886–1286	96	7	2995–00–906–9713	58	5
4920–00–886–1287	96	8	4920–00–906–9755	86	1
4920–00–886–1288	97	1	5305–00–908–9765	15	31
5306–00–886–1453	20	2	4920–00–909–2597	85	4
5120–00–886–1794	67	12	4920–00–909–2599	85	6
4730–00–888–4754	18	30	4920–00–909–4187	107	8
4920–00–888–9547	87	2	5120–00–909–4210	85	3
4920–00–889–7249	92	6	4730–00–910–3068	3	18
5120–00–890–2760	67	2	4720–00–910–3177	47	17
4920–00–890–5180	103	6	3120–00–911–9184	15	25
5120–00–891–1335	99	3	5340–00–911–9255	55	2
4920–00–891–1366	95	7	5340–00–911–9262	46	5
5120–00–891–3120	88	8	5305–00–912–4818	47	30
4920–00–891–4653	84	3	5340–00–913–3871	47	28
4920–00–891–8372	98	4	5310–00–913–4028	15	27
5330–00–893–0347	32	25	5330–00–913–4103	45	3
5120–00–893–2519	88	3	5120–00–913–5926	93	6
2840–00–893–3787	36	4	5305–00–914–3809	20	17
5305–00–893–3900	37	18	5365–00–915–0046	25	1
2945–00–893–5601	110	7	2840–00–915–5933	42	1
5310–00–893–6003	36	5	3040–00–915–5952	43	24
5315–00–894–2548	22	7	5365–00–915–5967	40	12
5315–00–894–2549	22	7		41	12
5315–00–894–2550	22	7	2840–00–915–5994	40	13
2840–00–894–6531	40	21		41	13
5330–00–895–9477	58	4	3040–00–915–5999	43	1
4730–00–895–9489	16	10	5365–00–916–2391	42	5
2840–00–896–6274	33	35	5330–00–916–2407	40	14
3040–00–896–6275	33	8		41	14
3130–00–896–6276	6	30	5330–00–916–2408	42	3

CROSS-REFERENCE INDEXES

NATIONAL STOCK NUMBER INDEX

STOCK NUMBER	FIG.	ITEM
5315–00–916–2410	43	25
2840–00–916–2415	42	4
5310–00–916–2419	40A	21
	41A	19
5365–00–916–2424	40	6
	41	6
5365–00–916–2425	40	6
	41	6
5365–00–916–2427	40	6
	41	6
5365–00–916–2429	43	27
5365–00–916–2432	43	27
5365–00–916–2433	43	27
5340–00–916–2591	43	29
4920–00–917–7101	87	6
5120–00–917–7116	94	5
5310–00–917–7140	40A	13
	41A	11
4920–00–917–9975	88	1
5120–00–917–9977	88	5
5340–00–919–0190	88	4
4920–00–919–0195	85	7
4920–00–919–1348	85	8
4920–00–919–1349	85	8
5120–00–919–2377	108	5
5340–00–919–6052	88	4
5306–00–919–8913	4	1
5305–00–921–5408	43	14
2840–00–922–5845	18	18
2840–00–922–5852	26	32
3020–00–923–0561	43	28
4920–00–923–2558	111	3
4920–00–923–2773	86	4
4920–00–923–2775	108	3
5120–00–923–3414	108	7
5120–00–923–3423	105	7
5120–00–923–3431	86	3
5120–00–923–3433	108	4
5120–00–923–3443	86	5
5120–00–923–3445	106	3
5120–00–923–3449	86	6
5120–00–923–3454	87	8
5120–00–923–3458	107	1
5120–00–923–3598	86	7
2915–00–924–3560	49	10
2840–00–924–3562	5	6
2840–00–924–3617	50	15
2940–00–924–3620	67	14
2840–00–924–3626	15	15
2840–00–924–3627	50	17
2840–00–924–3630	50	10
4710–00–924–3634	39	3
2840–00–924–3649	40	7
	41	7
2840–00–924–7625	26	35
2840–00–924–7626	15	16
2840–00–924–7697	50	18
4710–00–924–7767	26	37
2840–00–924–7807	18	22
2840–00–924–7933	13	2
	23	5
2840–00–924–7985	11	37
	17	27
2840–00–924–8003	15	7
2840–00–924–8007	15	12
2840–00–924–8521	12	4
	23	15
2840–00–924–8551	12	2
	23	13
3040–00–924–8571	24	8
2840–00–924–8636	18	9
2840–00–924–8648	4	7
2840–00–925–2971	50	6
2840–00–925–2972	13	1
4710–00–925–2973	4	16
2840–00–925–2976	15	28
2915–00–925–2980	5	15
4710–00–925–3021	3	20
3040–00–925–3028	5	13
2840–00–925–4145	18	7
5340–00–925–4146	26	7
2840–00–925–4148	26	9
4140–00–925–4149	26	16
1560–00–925–4150	26	21
2840–00–925–4151	26	5
1660–00–925–4152	26	22
2840–00–925–4153	18	11
4710–00–925–4156	18	28
2840–00–925–4159	18	16
2840–00–925–4186	15	1
2840–00–925–7012	19	8
5365–00–925–7307	26	17
2840–00–925–7332	20	36
2840–00–925–8025	20	26
2840–00–925–8026	20	21
2840–00–925–9560	28	2
2840–00–925–9620	8	7
2840–00–925–9621	8	9
2840–00–925–9644	8	8
2840–00–925–9747	26	19
2840–00–925–9834	8	10
2840–00–925–9967	20	38
2840–00–925–9986	20	31
	20	31
	20	33
3120–00–927–3618	89	8
5315–00–927–5794	16	41
5365–00–927–9541	49	8
5365–00–928–2008	55	7
5365–00–928–3876	4	6
6685–00–928–4063	21	6
5330–00–929–5816	17	39
4920–00–929–8451	94	6
5310–00–931–4785	25	13

CROSS-REFERENCE INDEXES

NATIONAL STOCK NUMBER INDEX

STOCK NUMBER	FIG.	ITEM
4710–00–931–8269	18	26
2840–00–931–8270	35	9
4730–00–933–0924	19	3
5310–00–933–1370	26	23
5305–00–934–0058	50	16
5305–00–935–7521	20	39
5330–00–937–2547	17	37
2995–00–937–3142	53	37
5330–00–937–5959	53	38
2840–00–939–5952	42	2
2840–00–939–7718	40	15
4730–00–939–8492	19	2
5305–00–939–9147	53	2
5305–00–939–9172	53	35
5305–00–939–9188	53	4
	54	19
5305–00–939–9189	54	17
5305–00–939–9221	18	3
5305–00–939–9230	20	19
	59	21
4920–00–940–0346	89	6
5305–00–941–3551	59	6
5305–00–941–9437	58	1
2840–00–942–6230	20	9
4730–00–942–7073	20	10
2840–00–942–7093	22	11
2840–00–942–7304	18	10
2840–00–942–9548	26	25
5340–00–942–9755	10	30
3040–00–943–0054	19	5
2840–00–943–2206	11	47
	14	22
2840–00–943–2216	26	6
3455–00–943–2345	67	10
5365–00–943–2362	23	20
2840–00–943–2375	25	9
2840–00–943–2382	22	8
2840–00–943–2411	20	20
5995–00–943–2422	55	9
3040–00–943–2529	10	28
2840–00–943–9876	22	21
2840–00–944–0520	22	15
	22	15
5315–00–944–1093	5	3
5315–00–944–1097	22	7
2840–00–944–2516	20	35
2840–00–944–2547	24	10
2840–00–944–2567	6	31
	11	1
5305–00–944–4272	22	16
	22	16
2840–00–944–4852	40A	20
	41A	18
2840–00–944–4853	40A	16
	41A	14
2840–00–944–4901	50	9
2915–00–944–7295	45	1

STOCK NUMBER	FIG.	ITEM
2840–00–944–7597	24	13
2840–00–944–7808	25	16
5310–00–944–8062	5	18
2840–00–945–0208	40	10
	41	10
5330–00–945–0209	40	2
	41	2
5360–00–945–0210	50	3
5365–00–945–3902	18	27
5365–00–945–3910	50	11
5330–00–945–3911	5	5
2840–00–945–4532	42	13
3020–00–945–4562	42	10
5360–00–945–5598	50	12
2840–00–945–5601	42	13
2840–00–945–5602	6	12
2840–00–945–5613	11	38
	23	17
2840–00–945–5617	15	24
2840–00–945–5619	22	18
5310–00–945–5750	25	3
4730–00–945–5884	47	11
4720–00–945–5900	47	7
2840–00–945–8095	42	13
2840–00–945–8096	42	13
2840–00–945–8225	19	10
2840–00–946–1496	5	2
4920–00–946–2188	90	3
4940–00–946–2195	94	3
2840–00–946–2416	8	11
4920–00–946–4860	94	4
2995–00–946–6603	5	17
5330–00–946–7073	26	12
5365–00–947–3185	22	2
5365–00–947–3190	43	27
5315–00–947–3250	25	10
5306–00–947–3552	40A	2
5365–00–947–3561	5	16
5330–00–947–6221	26	11
1560–00–947–6222	5	22
5365–00–947–6225	11	44
5310–00–947–9858	4	12
	15	10
5365–00–947–9880	26	10
5365–00–948–0616	24	14
5330–00–948–0955	5	10
5306–00–948–3236	11	46
	23	1
5306–00–948–3240	22	20
5306–00–948–3243	17	31
	26	1
5365–00–948–8031	11	36
	17	28
5365–00–948–8032	11	36
	17	28
2840–00–948–9351	7	5
5340–00–948–9358	7	9

CROSS-REFERENCE INDEXES

NATIONAL STOCK NUMBER INDEX

STOCK NUMBER	FIG.	ITEM
2840–00–949–5457	10	24
5365–00–949–5471	10	12
5310–00–949–5488	11	39
	23	16
5365–00–949–5495	11	36
	17	28
2840–00–949–7809	42	13
5305–00–949–7863	15	20
2995–00–949–8219	45	4
5330–00–949–9271	17	8
2925–00–950–2516	55	19
5340–00–950–2664	25	15
	25	15
5365–00–950–2905	6	10
5365–00–950–2928	6	10
5365–00–950–2988	6	10
5365–00–950–2991	6	10
5365–00–950–2992	6	10
5365–00–950–2993	6	10
5365–00–950–3002	6	10
5365–00–950–3008	6	10
5365–00–950–3051	6	10
5365–00–950–3232	6	10
5330–00–950–6824	25	21
5306–00–951–0776	36	6
5305–00–952–0959	5	19
5120–00–952–7217	93	8
5120–00–952–7218	90	1
5120–00–952–7256	95	1
5120–00–952–7257	87	7
5310–00–952–7392	6	11
5305–00–952–7403	15	29
5365–00–952–7451	40A	24
	41A	22
5315–00–952–7566	37	27
	38	8
5365–00–952–7570	42	11
2915–00–953–4965	54	9
4710–00–953–4991	53	1
2840–00–954–4278	50	14
5330–00–954–4472	25	20
2840–00–954–4477	25	12
2840–00–954–4480	25	19
5340–00–954–4700	25	17
2840–00–954–5890	15	9
2840–00–954–6117	40	25
2840–00–954–6142	40A	1
2840–00–954–6185	40A	10
	41A	8
4730–00–954–6199	40	17
	41	16
4920–00–954–8961	76	2
4920–00–955–0030	107	5
5920–00–955–9392	67	11
5320–00–955–9397	25	22
5977–00–955–9484	67	13
5315–00–955–9667	24	9
2840–00–957–2389	55	17
5340–00–957–2392	55	12
2840–00–957–2536	15	18
2995–00–957–2709	60	16
2840–00–957–6580	17	14
2840–00–957–6634	15	19
4730–00–957–7583	47	8
5315–00–957–7584	20	37
5935–00–957–8984	15	6
2840–00–957–9055	4	5
5365–00–957–9091	13	4
2925–00–957–9947	55	8
5310–00–958–4505	10	20
3110–00–958–7325	63	6
5365–00–959–5744	26	33
2915–00–959–6282	45	7
5120–00–959–7634	82	3
5120–00–959–7635	82	4
2840–00–960–0174	20	15
2840–00–961–1394	6	6
2840–00–961–1398	10	7
2840–00–961–1399	10	1
4320–00–962–0088	63	18
4730–00–963–5333	10	8
3040–00–964–2109	61	7
2915–00–964–2273	45	6
4720–00–966–2201	60	10
4720–00–966–2203	60	1
4720–00–966–2204	47	16
4720–00–966–2205	47	18
4720–00–966–2206	46	2
4720–00–966–2230	47	23
4720–00–966–2232	2	3
4720–00–966–2233	46	1
4720–00–966–2239	51	5
4720–00–966–2240	46	11
5305–00–966–2431	9	2
5365–00–966–8258	52	1
5310–00–969–6019	54	2
5305–00–969–6487	47	6
	55	5
	60	2
5340–00–971–6245	18	25
5330–00–975–0245	20	40
2840–00–975–0254	42	16
5310–00–975–9407	58	8
2840–00–976–9303	31	12
2840–00–977–1039	39	14
2915–00–977–1051	54	25
5120–00–977–2191	99	1
2840–00–979–3741	51	25
	57	13
4920–00–979–8932	111	5
2840–00–980–9423	3	4
5310–00–981–5970	51	22
5340–00–983–6604	46	12
4920–00–983–7360	96	3

CROSS-REFERENCE INDEXES

NATIONAL STOCK NUMBER INDEX

STOCK NUMBER	FIG.	ITEM
4920–00–983–7514	97	4
4920–00–983–7555	94	1
5306–00–984–2641	31	14
5310–00–984–6705	62	6
5330–00–984–7138	3	3
5340–00–986–2929	16	30
5120–00–986–5949	96	4
4720–00–986–9991	60	15
4820–00–987–0421	54	24
5365–00–987–9525	6	28
	11	4
5365–00–987–9526	6	28
	11	4
5365–00–987–9533	26	27
5360–00–987–9936	53	20
5120–00–988–8852	97	7
5120–00–989–0017	87	5
4920–00–989–0018	96	1
4920–00–989–0020	99	2
4920–00–989–0024	98	1
5120–00–989–0038	88	6
5365–00–989–2827	6	28
	11	4
5365–00–989–2828	6	28
	11	4
5365–00–989–2829	6	28
	11	4
5365–00–989–2830	26	27
3110–00–989–7002	53	21
5330–00–990–2853	17	7
2805–00–990–3221	58	11
5306–00–990–9291	40A	9
	41A	7
2915–00–992–1146	53	17
5365–00–992–1150	54	10
2915–00–992–1165	54	13
4920–00–994–1129	96	5
5120–00–994–3282	102	7
5365–00–994–4272	26	27
5365–00–994–4273	26	27
5365–00–994–4274	26	27
5365–00–994–4275	26	27
5365–00–994–4276	26	27
5365–00–994–4277	26	27
2840–00–994–4302	51	16
5320–00–995–1876	25	8
5310–00–995–6919	31	15
5365–00–995–7060	63	35
3460–00–996–2171	97	6
4920–00–997–4712	92	1
4920–00–997–4713	71	1
5330–01–005–0508	32	19
5331–01–005–0508	40	8
	41	8
2915–01–005–9196	51	10
2840–01–006–1118	11	14
	14	5
5365–01–006–1148	6	13
5365–01–006–1149	6	13
5365–01–006–1150	6	13
5330–01–006–3931	32	23
5365–01–007–1066	6	13
2840–01–008–1373	6	26
	11	6
2840–01–008–5688	20	42
2840–01–008–5729	8	5
2840–01–008–5730	7	1
2840–01–008–5731	25	5
2840–01–008–5733	20	20
2840–01–008–5734	17	9
5360–01–008–5944	25	1
5365–01–008–5947	22	9
2840–01–008–5951	17	30
5365–01–008–5952	23	8
2840–01–008–5953	3	1
2840–01–008–5954	17	25
2840–01–008–5982	26	2
2840–01–008–5983	11	43
	23	11
2840–01–008–5984	17	16
2840–01–008–5985	17	15
2840–01–008–5986	26	3
2995–01–008–7763	7	18
2840–01–008–7873	24	3
2840–01–008–7874	23	9
2840–01–008–7877	22	1
2840–01–008–7887	28	4
2840–01–008–7890	20	9
5330–01–008–8243	6	14
2840–01–009–3366	20	6
2840–01–009–3369	20	31
2840–01–009–3686	29	5
	30	2
2840–01–009–3688	24	5
2840–01–009–3689	23	4
2840–01–009–3717	23	6
2840–01–009–3718	28	3
2840–01–009–3719	12	3
	23	14
2840–01–009–3722	22	19
	29	3
5977–01–009–4932	79	5
5330–01–009–5339	17	35
5306–01–009–7107	51	29
5365–01–010–0958	23	3
5306–01–010–1053	22	20
5330–01–010–1085	17	34
2840–01–010–1450	23	2
2840–01–010–1453	24	1
5365–01–010–1513	22	2
5340–01–010–1514	6	22
2840–01–010–5826	18	6
2840–01–010–5841	25	9
2840–01–010–5941	22	14

CROSS-REFERENCE INDEXES

NATIONAL STOCK NUMBER INDEX

STOCK NUMBER	FIG.	ITEM
6685–01–010–5942	20	16
2840–01–010–5949	22	10
2840–01–011–2007	18	8
3110–01–011–2093	17	38
2840–01–011–5045	26	28
5340–01–011–6864	16	38
6685–01–011–8035	57	6
6685–01–011–8036	22	12
2840–01–012–5726	21	3
5306–01–013–2962	6	23
5365–01–013–3516	22	2
5331–01–013–3718	41	5
5306–01–013–3974	20	39
	22	17
5306–01–013–5705	3	14
4720–01–013–8142	47	24
5310–01–014–5135	7	20
5306–01–015–0987	7	17
5305–01–015–7088	20	43
5310–01–016–3541	17	24
5365–01–016–6747	22	2
2915–01–018–3827	54	8
5306–01–019–3490	7	12
1015–01–019–7117	34	4
4920–01–020–1689	82	5
5120–01–020–1690	82	6
5977–01–021–5086	79	6
2840–01–029–8740	13	3
2840–01–031–8758	11	45
5315–01–038–1446	11	13
	11	21
	14	4
	14	12
4920–01–040–0978	79	7
5120–01–042–5477	83	2
4920–01–042–9970	82	7
5365–01–044–8091	6	13
5365–01–044–8092	6	13
5340–01–047–0632	2	1
	47	29
	51	1
	55	10
	57	9
	60	3
5365–01–053–1131	33	18
5306–01–073–3625	61	1
5306–01–073–3626	61	15
5306–01–073–3627	61	17
5306–01–073–3628	4	2
5330–01–073–3688	6	9
2840–01–073–3841	17	12
5315–01–074–0372	15	17
5306–01–075–1901	3	13
5315–01–076–6509	7	2
5306–01–078–8927	6	20
	10	22
5306–01–081–4451	24	7

STOCK NUMBER	FIG.	ITEM
5306–01–083–1581	17	29
	19	9
2840–01–089–4107	29	2
2840–01–089–4291	22	19
5310–01–091–1248	6	33
5330–01–100–9633	17	1
4920–01–106–9685	75	4
4920–01–106–9686	75	5
5315–01–110–2531	53	23
5365–01–115–7425	37	40
2945–01–115–9547	62	19
4730–01–122–3681	16	32
2840–01–128–6309	26	14
5330–01–129–3145	45	2
3110–01–133–3154	33	7
5330–01–138–1129	15	30
5220–01–138–6971	83	1
1730–01–139–1281	82	8
5120–01–139–4541	83	7
1730–01–139–4717	83	3
2840–01–145–3859	31	17
5306–01–151–2234	24	7
2840–01–154–7142	11	16
	14	7
9905–01–162–6974	15	4
5306–01–165–2890	32	21
2840–01–174–8123	40A	27
	41A	25
2840–01–177–5697	9	6
2840–01–177–5698	9	8
2840–01–177–5699	9	9
2840–01–179–0793	9	7
4320–01–182–9057	61	16
5315–01–183–8845	44	2
5330–01–184–7534	63	20
2915–01–216–9779	51	11
3120–01–244–8729	63	19
2840–01–254–1014	17	20
3110–01–258–7974	33	1
	37	44
	43	26
2840–01–271–8434	20	27
3110–01–281–3890	40	22
5320–01–289–5877	33	3
	33	12
5120–01–294–6946	83	6
4920–01–296–7258	112	1
3040–01–302–4492	33	2
2945–01–303–5111	61	13
2840–01–304–1058	11	30
	14	18
5120–01–304–3622	83	4
2840–01–308–5669	17	30
3020–01–326–7390	33	11
5365–01–329–7824	13	4
	23	7
3680–01–329–9891	67	1

CROSS-REFERENCE INDEXES

NATIONAL STOCK NUMBER INDEX

STOCK NUMBER	FIG.	ITEM
5330–01–330–9629	51	15
2840–01–331–3053	31	3
5365–01–334–0222	6	15
2840–01–334–9226	11	45
2840–01–337–6789	13	3
4540–01–349–9605	65	1
6685–01–355–3538	64	1
	65	2
2840–01–360–7968	26	29
5365–01–361–6663	26	30
6620–01–376–3205	62	15
3110–01–382–6374	11	34
	17	5
	26	34
5330–01–398–5812	18	5
4730–01–422–7845	61	14A
5340–01–430–0385	43	8
3020–01–445–7341	43	7
2840–01–458–8639	42	7
2840–01–459–1267	39	10
3040–01–459–1398	40A	18
	41A	16
3040–01–459–1408	40A	25
	41A	23
3110–01–459–1410	40A	23
	41A	21
5325–01–459–1437	40A	22
	41A	20
3110–01–459–5543	43	19
3110–01–459–5545	43	6
5365–01–459–5916	43	5
5365–01–459–5920	43	5
5365–01–459–5923	43	5
5365–01–459–5926	43	5
5365–01–459–5928	43	5
5365–01–459–5930	43	5
5365–01–459–5931	43	5
3110–01–460–6025	40	11
	41	11
3110–01–460–6056	40A	17
	41A	15
3110–01–460–6073	40A	19
	41A	17
2840–01–460–6076	40	25
	41	22
2840–01–460–6077	43	23
2840–01–462–0740	41	20
2840–01–462–0765	39	10

CROSS-REFERENCE INDEXES

PART NUMBER INDEX

PART NUMBER	FIG.	ITEM
AC–A926E–440	62	19
AN100043	32	14
AN103710	8	1
AN103712	37	24
AN104011	16	1
AN104706	40A	14
	41A	12
AN106408	40	18
	41	17
AN106506	26	8
AN106508	40	1
	41	1
AN107520	40A	9
	41A	7
AN115408	17	13
AN115410	17	31
AN115807	2	6
	57	10
AN116905	57	17
AN116916	57	17
AN116917	57	17
AN122683	44	5
AN122684	16	20
AN122705	16	27
	37	22
	38	10
AN122729	34	6
AN122730	16	23
	35	4
AN150279	42	21
AN3–10	4	15
	5	23
AN3–6	4	18
AN360–3	54	21
AN500AD5–5	5	19
AN500AD5–8	15	20
AN502–10–26	50	1
AN503–416–8	53	33
AN510C10–6	41	18
AN510C5R4	26	20
AN924–4D	15	33
AN924–4J	47	10
	51	9
AN932D1	16	37
AN932D2	16	35
AN960–10	10	5
AN960–10L	4	14
	5	21
	37	25
	51	28
	61	2
AN960–416L	3	5
	4	3
	6	2
AN960–416L	7	13
	10	23
	32	15
	33	21
	36	8
	39	8
	61	12
AN960–516	7	7
AN960–516L	51	13
AN960–616L	7	19
	16	2
	31	18
AN960C10L	8	2
	43	4
AN960C416	4	4
	6	21
	42	26
	53	3
AN960C416L	52	7
	53	34
AN960C516L	40A	8
	41A	6
AN960C716	47	9
AN960C8	51	19
AN960PD8	63	4
BH11748	64	1
	65	2
BH4352	75	1
BH7434L40	75	2
BH7434R40	75	3
BH7454AH–40	75	4
BH7454BH–40	75	5
EAB700–3	57	11
G2E173A	65	1
HJB1	75	6
LTCL403	94	7
LTCT100	75	7
LTCT10175–01	75	8
LTCT10440–01	76	1
LTCT10522–01	76	2
LTCT107	76	3
LTCT108	76	4
LTCT11043	76	5
LTCT11049	76	6
LTCT11069	76	7
LTCT1109	76	8
LTCT11175	77	1
LTCT11176	77	2
LTCT11201	77	3
LTCT11209	77	4
LTCT11222	77	5
LTCT11274	77	6
LTCT11275	77	7
LTCT11276	77	8
LTCT11295	78	1
LTCT11296	78	1
LTCT11315	78	2
LTCT11320	78	3
LTCT11321	78	4
LTCT11322	78	5

CROSS-REFERENCE INDEXES

PART NUMBER INDEX

PART NUMBER	FIG.	ITEM	PART NUMBER	FIG.	ITEM
LTCT11323	78	6	LTCT2041	85	4
LTCT11327	78	7	LTCT2044	85	5
LTCT11329	78	8	LTCT2048	85	6
LTCT11330	79	1	LTCT2052	85	7
LTCT11338	79	2	LTCT2057	85	8
LTCT11365	79	3	LTCT2058	85	8
LTCT11366	79	4	LTCT2067	86	1
LTCT11367	79	5	LTCT207	86	2
LTCT11368	79	6	LTCT2073	86	3
LTCT11403	79	7	LTCT2075	86	4
LTCT115	79	8	LTCT2079	86	5
LTCT1218	80	1	LTCT2080	86	6
LTCT123	80	2	LTCT2086	86	7
LTCT1255	80	3	LTCT2096	86	8
LTCT13001	80	4	LTCT2099	87	1
LTCT13003	80	5	LTCT2112	87	2
LTCT13007	80	6	LTCT2118	87	3
LTCT13070	80	7	LTCT2119	87	3
LTCT13175	80	8	LTCT2120	87	4
LTCT13205	81	1	LTCT2121	87	5
LTCT13206	81	2	LTCT2125–01	67	1
LTCT13345	81	3	LTCT2129	87	6
LTCT13356	81	3	LTCT2133	87	7
LTCT13367	81	4	LTCT2142	87	8
LTCT13606–01	81	5	LTCT2147–01	88	1
LTCT13676	81	6	LTCT2149	88	2
LTCT13688	81	7	LTCT215	88	3
LTCT13726	81	8	LTCT2151	88	4
LTCT13846	68	1	LTCT2152	88	4
LTCT142	82	1	LTCT2158–01	88	5
LTCT14240	82	2	LTCT2159	88	6
LTCT1429	82	3	LTCT216	88	7
LTCT1430	82	4	LTCT2161	88	8
LTCT14503	82	5	LTCT231	89	1
LTCT14514	82	6	LTCT236	89	2
LTCT14593–01	82	7	LTCT251	89	3
LTCT14668–01	82	8	LTCT256	89	4
LTCT14679	83	1	LTCT258	89	5
LTCT14716–01	83	2	LTCT26151–01	89	6
LTCT14721	83	3	LTCT270	89	7
LTCT14733	83	4	LTCT2712–03	89	8
LTCT14753	83	5	LTCT2712–27	89	8
LTCT14773	83	6	LTCT2712–28	89	8
LTCT14774–01	83	7	LTCT2712–39	89	8
LTCT14778	83	8	LTCT2712–40	89	8
LTCT14779–01	84	1	LTCT2958	72	1
LTCT153	84	2	LTCT2966	90	1
LTCT1643	84	3	LTCT3038	90	2
LTCT1644	84	3	LTCT3040	90	3
LTCT179	84	4	LTCT30719–01	74A	1
LTCT197	84	5	LTCT30719–06	74A	5
LTCT2003	84	6	LTCT30719–07	74A	4
LTCT2020–01	84	7	LTCT30719–08	74A	3
LTCT2021	84	8	LTCT30741–01	74B	1
LTCT2027	85	1	LTCT30741–06	74B	4
LTCT2028	85	2	LTCT30741–07	74B	5
LTCT2037	85	3	LTCT30741–08	74B	8

CROSS-REFERENCE INDEXES

PART NUMBER INDEX

PART NUMBER	FIG.	ITEM	PART NUMBER	FIG.	ITEM
LTCT30741–10	74B	6	LTCT4153	95	7
LTCT30741–11	74B	7	LTCT4155	95	8
LTCT313	90	4	LTCT4172	96	1
LTCT315	90	5	LTCT4174	96	2
LTCT316	90	6	LTCT4179	96	3
LTCT340	90	7	LTCT4181	96	4
LTCT3486	90	9	LTCT4182	96	5
LTCT3492	91	1	LTCT4190	96	6
LTCT3493	91	1	LTCT421	96	7
LTCT3494	91	1	LTCT422	96	8
LTCT3636	91	1	LTCT423	97	1
LTCT3637	91	1	LTCT4402–01	67	2
LTCT3638	91	2	LTCT4402–02	67	3
LTCT3640	91	3	LTCT4405	67	4
LTCT3646	91	4	LTCT4406	67	5
LTCT3648	91	5	LTCT4408	67	6
LTCT3653	91	6	LTCT4409	67	7
LTCT3654	91	7	LTCT4450	67	8
LTCT3658	91	8	LTCT4535	97	2
LTCT3659	91	8	LTCT4547	97	3
LTCT3660	91	8	LTCT4553	97	4
LTCT3661	91	8	LTCT4558	97	5
LTCT3662	91	8	LTCT456	97	6
LTCT3663	91	8	LTCT4560	97	7
LTCT3664	91	8	LTCT4564	97	8
LTCT3685	92	1	LTCT4568	98	1
LTCT3694	92	2	LTCT4571	98	2
LTCT3706	92	3	LTCT4576	98	3
LTCT3788	92	4	LTCT4602	98	4
LTCT3825	92	5	LTCT4650	98	5
LTCT3833	92	6	LTCT4670	98	6
LTCT387	92	7	LTCT4676	98	7
LTCT3911	92	8	LTCT4677	98	8
LTCT393	93	1	LTCT4680	99	1
LTCT3938	93	2	LTCT4692	99	2
LTCT3955	93	3	LTCT4698	99	3
LTCT3963	93	4	LTCT4713	99	4
LTCT3981	93	5	LTCT4719	99	5
LTCT4002	93	6	LTCT4726	99	6
LTCT4006–02	70	1	LTCT4750	99	7
LTCT4006–03	69	1	LTCT4800	99	8
LTCT4007	93	7	LTCT4807	100	1
LTCT4012	93	8	LTCT4809	100	2
LTCT4013	94	1	LTCT4810	100	3
LTCT4014	94	2	LTCT4816	71	1
LTCT4018	94	3	LTCT4817	100	4
LTCT4019	94	4	LTCT483	100	5
LTCT4020	94	5	LTCT4842	100	6
LTCT4028	94	6	LTCT4846	100	7
LTCT4029	94	6	LTCT487	100	8
LTCT404	94	8	LTCT4875	101	1
LTCT4051	95	1	LTCT4900	101	2
LTCT407	95	2	LTCT4904	101	3
LTCT4078	95	3	LTCT4947	101	4
LTCT4084	95	4	LTCT496	101	5
LTCT409	95	5	LTCT4981	101	6
LTCT413	95	6	LTCT499	101	7

CROSS-REFERENCE INDEXES

PART NUMBER INDEX

PART NUMBER	FIG.	ITEM	PART NUMBER	FIG.	ITEM
LTCT4996	101	8	LTCT9263	67	12
LTCT501	102	1	LTCT9264	67	13
LTCT505	102	2	LTCT9266	67	14
LTCT506	102	3	LTCT9267	74	20
LTCT509	102	4	LTCT9268	74	5
LTCT511	102	5	LTCT9269	74	7
LTCT519	102	6	LTCT9270	74	17
LTCT526	102	7	LTCT9271	74	19
LTCT58	102	8	LTCT9272	74	13
LTCT590–2	103	1	LTCT9273	74	11
LTCT6000	103	2	LTCT9274	74	15
LTCT6073	103	3	LTCT9275	74	18
LTCT6124	103	4	LTCT9276	74	16
LTCT6139	103	5	LTCT9277	74	12
LTCT6169	103	6	LTCT9297	108	6
LTCT6203	103	7	LTCT9374	66	1
LTCT6304	103	8	LTCT9379	74	14
LTCT6465	104	1	LTCT9396	67	15
LTCT6483	104	2	LTCT962	108	7
LTCT6484	104	3	LTCT9896	108	8
LTCT6485	104	4	MD1D–6X9X6	74B	10
LTCT6616	104	5	MS124655	16	30
LTCT6641	104	6	MS124656	9	5
LTCT6645	104	7	MS124658	35	10
LTCT6646	104	7	MS124660	16	21
LTCT6722	104	8	MS124695	9	4
LTCT6740	105	1		10	2
LTCT675	105	2		16	29
LTCT6756	105	3		34	3
LTCT6763	105	4		35	13
LTCT6837	105	5		44	4
LTCT6905	105	6	MS124696	3	2
LTCT691	105	7		10	3
LTCT6917	106	1		34	7
LTCT6940	106	2	MS124698	16	6
LTCT696	106	3	MS124735	38	11
LTCT6961	106	4		40	28
LTCT6962	106	5		41	25
LTCT6987	106	6	MS124736	16	28
LTCT716	106	7		35	11
LTCT718	106	8		40	26
LTCT752	107	1		41	23
LTCT773	107	2		62	10
LTCT791	107	3	MS124739	16	33
LTCT818	107	4	MS124740	16	38
LTCT859	107	5	MS124816	35	12
LTCT862	107	6	MS15795–810	6	33
LTCT865	107	7	MS15795–812	74B	3
LTCT896	107	8	MS15795–815	74B	9
LTCT9043–01	108	1	MS16562–194	53	23
LTCT911	108	2	MS16624–1106	3	9
LTCT912	108	3	MS16625–1062	62	18
LTCT915	108	4	MS16625–1068	16	13
LTCT916	108	5	MS16625–1102	16	8
LTCT9260	67	9	MS16625–1185	32	6
LTCT9261	67	10	MS16625–3037	16	17
LTCT9262	67	11	MS16625–3068	43	11

CROSS-REFERENCE INDEXES

PART NUMBER INDEX

PART NUMBER	FIG.	ITEM
MS16995–11	26	24
MS171522	25	2
MS16995–18	74A	2
MS171526	34	4
MS172203	37	20
MS172237	43	9
MS172238	37	21
	43	30
MS172241	40A	15
	41A	13
MS172272	37	7
MS172322	37	8
MS17826–3	2	2
	4	19
	46	3
	47	22
	51	3
MS17826–3	55	1
	57	12
	60	5
MS19060–4806	54	27
MS19060–4820	63	6
MS20613–3C3	20	24
	20	29
MS20613–4C4	25	8
MS21042–04	57	5
MS21042–3	5	20
MS21042–4	4	8
	6	1
	32	16
	33	20
	39	7
MS21042–5	7	6
	51	12
MS21042L3	10	4
MS21042L6	31	19
MS21043–08	20	18
MS21043–3	18	1
	47	27
MS21043–4	21	4
	57	7
MS21046C4	58	15
MS21122C5	2	1
	47	29
	51	1
	55	10
	57	9
	60	3
MS21318–1	63	1
MS21318–15	15	5
MS21919WCJ4	46	4
	47	15
	57	2
MS21919WH2	47	5
MS24391D4L	61	11
MS24392J4	2	11
	4	11
	31	8
	47	25
	51	6
MS24392J6	2	8
MS24394D4	15	32
MS24394J4	51	8
MS24396D4	54	1
MS24399D13	10	17
MS24399D3	4	10
MS24630–1	58	6
MS24665–151	4	17
MS24673–1	49	7
MS24673–2	49	6
MS24673–9	20	34
	46	7
MS24693C247	20	13
MS24693C269	15	8
MS27769D3	16	32
MS28034–3	61	18
MS29512–03	53	11
MS29512–04	54	3
MS29513–006	50	7
MS29513–008	53	19
MS29513–010	52	3
	53	13
MS29513–012	53	24
MS29513–013	54	33
MS29513–014	50	13
	54	32
MS29513–015	54	31
MS29513–017	50	8
MS29513–024	53	10
MS29513–027	53	14
	53	39
MS29513–110	54	7
MS29561–009	40	16
	41	15
MS29561–146	62	7
MS35265–46	51	20
MS35265–84	52	8
MS35266–59	47	6
	55	5
	60	2
MS35266–60	2	6
	57	10
MS35266–61	47	12
	54	20
MS35266–63	2	4
	46	9
	47	19
	49	3
	51	2
	55	4
	57	1
	60	12
MS35266–68	10	19
	55	14

CROSS-REFERENCE INDEXES

PART NUMBER INDEX

PART NUMBER	FIG.	ITEM
MS35266–71	10	21
MS35275–213	59	6
MS35275–215	58	1
MS35275–241	18	3
MS35275–243	20	19
	59	21
MS35275–263	53	4
	54	19
MS35275–264	54	17
MS35275–281	53	2
MS35275–287	53	35
MS35276–212	20	17
MS35276–261	47	30
MS51959–64	54	16
MS51960–63	20	8
	40	19
MS51967–2	52	6
MS51990–105P	37	31
MS9015–02	15	3
MS9015–04	16	40
MS9021–014	5	11
MS9021–030	5	14
MS9021–034	52	4
MS9021–223	5	9
MS9024–03	51	31
MS9089–06	3	17
MS9089–14	36	6
MS9105–56	40	23
MS9105–58	43	2
MS9105–59	61	21
MS9105–60	43	25
MS9105–77	44	2
MS9134–01	32	13
MS9147–35	4	1
MS9171–10	17	26
MS9202–015	17	7
MS9205–013	22	4
MS9241–010	62	4
MS9241–015	63	32
MS9314–03	19	3
MS9314–04	19	2
MS9349–05	46	10
MS9356–11	25	4
	74B	2
MS9361–10	62	6
MS9371–07	17	39
MS9373–017	17	8
MS9388–045	40	5
MS9390–570	7	2
MS9486–03	37	27
	38	8
MS9486–24	17	11
	42	20
MS9489–08	18	2
MS9490–28	42	23
MS9500–04	49	15
MS9501–08	39	1
MS9519–15	6	24
MS9519–17	6	18
MS9519–20	51	30
	57	16
MS9519–22	6	17
MS9519–30	4	2
MS9529–04	32	17
	55	18
MS9529–05	49	2
	55	13
MS9529–19	61	1
MS9530–10	61	9
MS9530–11	61	15
MS9530–13	3	16
	36	9
	60	17
MS9530–18	36	7
MS9530–40	61	17
MS9532–14	31	26
MS9533–42	31	22
MS9564–02	20	43
MS9565–05	22	13
	29	1
MS9565–08	43	3
MS9565–19	61	1
MS9565–20	51	29
MS9566–10	41A	2
MS9584–06	3	6
	39	15
	42	12
MS9584–19	42	27
MS9705–11	24	7
MS9902–02	37	40
MS9902–04	31	23
MS9902–06	33	18
MS9915–11	6	23
MS9923–04	32	21
MS9924–08	3	13
MS9924–25	7	12
MS9924–32	3	14
MS9944–27	7	17
MS9958–09	6	20
	10	22
M25988/4–904	45	2
M27426–3152D	40A	28
	41A	26
M83248–1–237	16	5
M83248–1–904	16	39
	52	2
M83248/1–006	26	36
M83248/1–008	33	32
	42	24
M83248/1–010	15	2
	16	15
	38	4
	46	6
M83248/1–012	36	3

CROSS-REFERENCE INDEXES

PART NUMBER INDEX

PART NUMBER	FIG.	ITEM
	43	16
M83248/1–013	39	6
	42	6
	62	16
M83248/1–014	37	3
	37	42
	39	5
	42	9
	62	17
	63	7
M83248/1–015	42	8
	63	8
M83248/1–016	50	4
	54	30
M83248/1–017	16	4
M83248/1–020	16	25
M83248/1–024	32	11
M83248/1–025	32	29
M83248/1–030	63	12
M83248/1–037	32	24
M83248/1–040	32	23
M83248/1–045	41	5
M83248/1–113	51	24
M83248/1–114	31	6
	61	5
M83248/1–115	61	6
M83248/1–122	31	1
	61	14
M83248/1–128	39	16
M83248/1–131	31	5
M83248/1–135	32	19
	40	8
	41	8
M83248/1–138	32	4
M83248/1–144	36	2
	40	3
	41	3
M83248/1–149	10	25
M83248/1–159	6	3
M83248/1–214	3	7
M83248/1–215	3	10
M83248/1–222	40A	26
	41A	24
M83248/1–230	61	4
M83248/1–232	10	26
M83248/1–235	16	11
M83248/1–904	2	10
	4	9
M83248/1–904	15	34
	31	7
	47	26
	51	7
	61	10
M83248/1–905	38	2
	60	8
M83248/1–906	2	9
	20	12
	31	24
	33	19
M83248/1–908	10	16
	31	9
NAS1351C4H14	20	39
NAS1715C8T	55	6
NAS43HT9–12	43	27
NAS561C3–11	33	14
NAS617–2	37	41
NAS617–8	37	43
N5000–43H	56	1
PD2501	109	1
PD2545	73	3
PD2546	73	1
PD2547–8	73	2
PD2555	73	4
RA16219	63	35
RA16223–3	63	31
RA16224	63	30
RA16226	63	34
RA17196–1	63	27
RA17196–2	63	26
RA17197–1	63	3
RA17361	63	5
RB16227	63	33
RB16464–5	63	23
RB17354	63	11
RB17356	63	21
RB17357–1	63	19
RB17358	63	25
RB17362	63	15
RB17363–1	63	13
RB17363–2	63	13
RB17363–3	63	13
RB17363–4	63	13
RB17365	63	28
RB25112	63	20
RB34893	63	2
RCADC28–312	109	2
RCADC38–484	109	2
RCADC56–641S	109	3
RCAD38–453	109	4
RCAD47–562	109	5
RCAD56–687	109	5
RC40C	109	6
RD17352	63	22
RD17353	63	16
RD17355	63	9
RD17366	63	29
RR17351	63	36
RR181S	63	14
RS26005–94	63	24
RS26038–3	63	10
RS26103–138	63	18
RZA12112PT	109	7
RZA12203–1	17	24
R1106W	109	8

CROSS-REFERENCE INDEXES

PART NUMBER INDEX

PART NUMBER	FIG.	ITEM	PART NUMBER	FIG.	ITEM
R1108W	110	1	T53L0–I0066–5	9	~8
R1110W	110	2	T53L0–I0066–7	9	9
R1111W	110	3	Z1200–054	20	5
R1707D	110	4	1–000–060–22	1	1
R1711D	110	4	1–000–060–23	1	1
R206D	110	5	1–020–015–01	40	20
R208D	110	5		41	19
R209D	110	5	1–020–017–01	39	11
R210D	110	6		40	24
SPT107	110	7		41	21
SP801	62	9	1–020–154–02	40A	11
SP805	62	3		41A	9
SP806	62	2	1–020–155–02	40A	12
SP809	62	8		41A	10
SRW25D	110	8	1–030–023–02	40	9
SRW25SA	111	1		41	9
SR25W4A	111	2	1–030–040–08	39	12
STD3001B121	16	22	1–030–067–02	40	7
STD3001B121N	16	22		41	7
STD3001B121P	16	22	1–030–069–01	39	9
STD3001B15N	35	3	1–030–073–01	39	13
STD3001B15P	35	3	1–030–123–02	40	22
STD3007B8N	34	8	1–030–123–06	41	20
STD3007B8P	34	8	1–030–129–01	40A	6
STD3007B8R	34	8	1–030–138–04	39	18
STD3018K11	42	22	1–030–139–02	39	20
STD3019C166	42	3	1–030–141–03	39	19
STD3019C62	40	14	1–030–165–03	40	10
	41	14		41	10
STD3019E58	26	13	1–030–172–01	40A	4
STD3019E72	6	9		41A	4
STD3022–123	42	15	1–030–181–01	40A	7
STD3023K1	32	33		41A	5
	37	17	1–030–182–03	40A	3
STD3023K2	39	2	1–030–183–03	40A	5
STD3023K2	61	8	1–030–185–01	40	15
STD3024C29	26	31	1–030–186–07	40	27
STD3027C5	47	2	1–030–186–09	40	27
STD3033B7	61	23		41	24
STD3033C15	51	26	1–030–187–03	40	13
STD3036–32	33	3		41	13
	33	12	1–030–191–14	40A	25
STD3053–25	43	22		41A	23
STD3053–3	32	34	1–030–192–04	39	17
STD3053–49	33	31	1–030–193–05	40A	18
STD3061–07	19	9		41A	16
STD3061–12	20	39	1–030–194–02	40A	21
	22	17		41A	19
STD3064–6	7	20	1–030–195–01	40A	20
STD3094	15	4		41A	18
STD64568	111	3	1–030–203–01	40A	2
SWE13852–1210	111	4	1–030–209–02	40	29
SWE13852–1510	111	5		41	26
TS5210S4–5	20	2	1–030–211–01	40A	16
T103–78	49	5		41A	14
T53L0–I0066–1	9	6	1–030–212–01	40	6
T53L0–I0066–3	9	7		41	6

CROSS-REFERENCE INDEXES

PART NUMBER INDEX

PART NUMBER	FIG.	ITEM	PART NUMBER	FIG.	ITEM
1–030–212–02	40	6	1–060–112–03	16	3
	41	6	1–060–115–01	16	18
1–030–212–03	40	6	1–060–118–01	16	9
	41	6	1–060–119–02	16	12
1–030–212–04	40	6	1–060–121–03	39	14
	41	6	1–060–122–01	6	5
1–030–213–01	42	4	1–060–124–01	6	4
1–030–214–01	42	2	1–060–124–02	6	4
1–030–217–01	40	12	1–060–124–03	6	4
	41	12	1–060–124–04	6	4
1–030–229–03	40	2	1–060–124–05	6	4
	41	2	1–060–124–06	6	4
1–030–240–02	40	21	1–060–124–07	6	4
1–030–265–01	40A	27	1–060–124–08	6	4
	41A	25	1–060–124–09	6	4
1–030–271–20	41A	3	1–060–124–10	6	4
1–030–273–02	40A	22	1–060–125–01	6	7
	41A	20	1–060–126–01	6	8
1–030–280–01	39	4	1–060–127–04	6	12
1–030–330–03	39	3	1–060–128–01	42	25
1–030–340–04	40A	1	1–060–135–02	15	7
1–030–340–05	41A	1	1–060–138–01	15	14
1–030–350–18	39	10	1–060–139–01	6	11
1–030–350–19	39	10	1–060–141–01	6	10
1–030–390–05	40	25	1–060–141–02	6	10
1–030–390–08	40	25	1–060–141–03	6	10
	41	22	1–060–141–04	6	10
1–030–400–01	42	1	1–060–141–05	6	10
1–030–450–02	40A	10	1–060–141–06	6	10
	41A	8	1–060–141–07	6	10
1–030–460–01	40	17	1–060–141–08	6	10
	41	16	1–060–141–09	6	10
1–060–013–01	16	34	1–060–141–10	6	10
1–060–037–01	16	19	1–060–142–01	15	31
1–060–060–01	16	16	1–060–143–01	16	26
1–060–081–04	42	19	1–060–151–01	15	9
1–060–082–01	42	13	1–060–152–02	42	17
1–060–082–02	42	13	1–060–153–01	42	18
1–060–082–03	42	13	1–060–154–01	16	31
1–060–082–04	42	13	1–060–162–01	6	13
1–060–082–05	42	13	1–060–162–02	6	13
1–060–088–03	15	16	1–060–162–03	6	13
1–060–089–03	15	13	1–060–162–04	6	13
1–060–090–03	42	16	1–060–162–05	6	13
1–060–091–04	15	22	1–060–162–06	6	13
1–060–092–03	15	23	1–060–190–01	6	6
1–060–093–03	15	26	1–060–220–03	15	1
1–060–095–01	15	29	1–060–250–03	15	19
1–060–096–02	15	28	1–060–260–07	15	18
1–060–097–01	15	27	1–060–270–05	15	15
1–060–098–02	16	41	1–060–300–03	15	6
1–060–099–02	15	21	1–060–310–01	15	12
1–060–102–03	16	36	1–060–340–01	15	24
1–060–106–03	16	24	1–070–002–01	43	18
1–060–106–04	16	7	1–070–006–01	43	20
1–060–107–01	16	14	1–070–007–01	43	21
1–060–109–03	16	10	1–070–011–01	43	12

CROSS-REFERENCE INDEXES

PART NUMBER INDEX

PART NUMBER	FIG.	ITEM
1–070–016–02	43	15
1–070–021–01	43	17
1–070–023–01	44	3
1–070–056–01	44	6
1–070–059–01	43	27
1–070–059–02	43	27
1–070–059–03	43	27
1–070–059–04	43	27
1–070–059–05	43	27
1–070–062–06	43	7
1–070–063–02	43	1
1–070–064–04	43	28
1–070–065–01	43	29
1–070–066–03	43	8
1–070–067–01	43	24
1–070–072–03	42	10
1–070–073–01	43	14
1–070–101–01	43	13
1–070–104–06	44	1
1–070–125–01	43	5
1–070–125–02	43	5
1–070–125–03	43	5
1–070–125–04	43	5
1–070–125–05	43	5
1–070–125–06	43	5
1–070–125–07	43	5
1–070–140–01	43	10
1–070–210–07	43	23
1–070–220–10	42	7
1–080–014–01	32	7
1–080–025–02	51	15
1–080–026–01	31	11
	31	16
1–080–028–02	11	9
	14	27
1–080–028–03	8	4
1–080–031–01	34	11
	35	7
1–080–032–01	34	9
1–080–034–01	35	8
1–080–037–01	33	9
	37	10
1–080–044–03	33	13
1–080–046–01	33	16
1–080–051–01	31	20
1–080–051–02	31	27
1–080–077–01	35	5
1–080–081–01	31	21
1–080–083–02	32	27
1–080–084–01	32	26
1–080–086–01	34	10
	35	6
1–080–087–01	35	9
1–080–100–03	31	12
1–080–153–03	33	26
1–080–154–04	33	4
1–080–159–01	33	25
1–080–185–01	31	14
1–080–186–01	31	15
1–080–250–25	31	3
1–080–251–01	33	15
1–080–253–01	33	5
1–080–256–01	32	12
1–080–259–01	32	1
1–080–260–03	33	11
1–080–261–01	32	3
1–080–264–10	34	1
1–080–265–15	35	1
1–080–266–01	32	18
1–080–267–01	32	2
1–080–268–01	32	31
1–080–269–01	32	30
1–080–270–04	33	23
1–080–271–01	32	32
1–080–273–01	33	29
1–080–274–01	32	22
1–080–275–02	32	28
1–080–276–03	61	22
1–080–279–02	61	20
1–080–280–03	33	2
1–080–282–01	31	4
1–080–283–01N	34	5
1–080–283–01P	34	5
1–080–283–01R	34	5
1–080–284–01N	35	2
1–080–284–01P	35	2
1–080–284–01R	35	2
1–080–285–01N	34	2
1–080–285–01P	34	2
1–080–285–01R	34	2
1–080–295–01	33	10
1–080–296–01	33	35
1–080–297–01	33	30
1–080–298–01	33	33
1–080–299–01	33	34
1–080–310–01	33	24
1–080–320–01	32	8
1–080–330–07	33	22
1–080–340–08	33	28
1–080–350–04	61	19
1–080–370–01	33	8
1–080–430–01	31	2
1–080–460–02	61	13
1–100–002–01	8	6
1–100–034–01	11	40
	23	18
1–100–063–05	12	4
	23	15
1–100–069–01	40A	13
	41A	11
1–100–078–13	11	30
	14	18
1–100–099–01	11	50
	14	25

CROSS-REFERENCE INDEXES

PART NUMBER INDEX

PART NUMBER	FIG.	ITEM
1–100–118–07	12	3
	23	14
1–100–131–01	11	38
	23	17
1–100–132–06	13	3
1–100–133–01	13	2
	23	5
1–100–135–03	13	1
1–100–140–09	7	11
1–100–144–01	12	2
	23	13
1–100–146–04	11	33
	17	2
1–100–147–02	11	35
	17	36
1–100–148–01	11	29
	11	31
	14	19
1–100–186–01	6	19
1–100–212–01	6	29
	11	3
1–100–213–02	6	28
	11	4
1–100–213–03	6	28
	11	4
1–100–213–04	6	28
	11	4
1–100–213–05	6	28
	11	4
1–100–213–06	6	28
	11	4
1–100–213–07	6	28
	11	4
1–100–213–08	6	28
	11	4
1–100–213–09	6	28
	11	4
1–100–213–10	6	28
	11	4
1–100–213–11	6	28
	11	4
1–100–213–12	6	28
	11	4
1–100–213–13	6	28
	11	4
1–100–213–14	6	28
	11	4
1–100–213–15	6	28
	11	4
1–100–213–16	6	28
	11	4
1–100–213–17	6	28
	11	4
1–100–213–18	6	28
	11	4
1–100–213–19	6	28
	11	4
1–100–213–20	6	28
	11	4
1–100–213–21	6	28
	11	4
1–100–214–03	8	3
1–100–227–01	26	27
1–100–227–02	26	27
1–100–227–03	26	27
1–100–227–04	26	27
1–100–227–05	26	27
1–100–227–06	26	27
1–100–227–07	26	27
1–100–227–08	26	27
1–100–227–09	26	27
1–100–227–10	26	27
1–100–227–11	26	27
1–100–227–12	26	27
1–100–227–13	26	27
1–100–227–14	26	27
1–100–227–15	26	27
1–100–227–16	26	27
1–100–227–17	26	27
1–100–227–18	26	27
1–100–227–19	26	27
1–100–227–20	26	27
1–100–227–21	26	27
1–100–227–22	26	27
1–100–227–23	26	27
1–100–227–24	26	27
1–100–227–25	26	27
1–100–227–26	26	27
1–100–227–27	26	27
1–100–227–28	26	27
1–100–227–29	26	27
1–100–227–30	26	27
1–100–227–31	26	27
1–100–227–32	26	27
1–100–276–01	6	30
	11	2
1–100–286–08	11	26
	14	17
1–100–286–09	11	26
	14	17
1–100–289–01	11	36
	17	28
1–100–289–02	11	36
	17	28
1–100–289–03	11	36
	17	28
1–100–292–02	11	46
	23	1
1–100–293–01	11	39
	23	16
1–100–294–03	11	44
1–100–334–05	3	8
1–100–344–01	11	48
	14	23

CROSS-REFERENCE INDEXES

PART NUMBER INDEX

PART NUMBER	FIG.	ITEM
1–100–346–02	42	11
1–100–361–05	11	11
	14	2
1–100–361–06	11	11
	14	2
1–100–362–06	23	6
1–100–383–04	11	25
	14	16
1–100–383–05	11	25
	14	16
1–100–384–04	11	24
	14	15
1–100–384–05	11	24
1–100–384–05	14	15
1–100–385–04	11	23
	14	14
1–100–385–05	11	23
	14	14
1–100–411–04	67	16
1–100–423–01	11	41
	23	19
1–100–449–01	11	49
	14	24
1–100–462–01	9	2
1–100–463–01	9	1
1–100–495–07	11	14
	14	5
1–100–496–03	11	17
	14	8
1–100–497–01	11	18
	14	9
1–100–498–01	11	19
	14	10
1–100–499–03	11	20
	14	11
1–100–501–01	11	27
	14	21
1–100–502–02	11	28
	11	32
	14	20
1–100–505–02	11	12
	11	22
	14	3
	14	13
1–100–506–02	11	8
	14	26
1–100–538–01	6	22
1–100–544–03	23	9
1–100–545–03	23	4
1–100–546–02	23	8
1–100–559–01	23	3
1–100–563–01	13	3
1–100–720–47	6	25
1–100–720–51	6	25
1–100–800–04	11	47
	14	22
1–100–880–12	11	45
1–100–890–03	13	4
1–100–890–07	13	4
	23	7
1–100–980–05	9	3
1–101–020–01	8	9
1–101–030–01	8	8
1–101–040–01	8	7
1–101–080–06	11	10
	14	1
1–101–090–07	11	15
	14	6
1–101–100–08	23	2
1–101–110–07	8	11
1–101–120–03	8	10
1–101–210–04	8	5
1–101–250–04	11	16
	14	7
1–101–260–11	11	7
1–101–360–04	11	43
	23	11
1–101–370–03	7	1
1–101–510–04	6	25
1–101–520–01	6	16
1–101–530–01	11	45
1–101–550–01	23	10
1–110–011–04	18	22
1–110–023–02	18	12
1–110–051–02	18	13
1–110–052–02	18	15
1–110–072–01	18	5
1–110–073–01	18	4
1–110–089–02	18	8
1–110–093–03	18	25
1–110–100–07	18	17
1–110–103–04	18	10
1–110–109–03	18	9
1–110–110–06	18	26
1–110–114–08	18	30
1–110–120–03	18	16
1–110–121–02	18	14
1–110–130–04	18	11
1–110–132–01	11	37
	17	27
1–110–137–01	17	29
1–110–141–01	23	20
1–110–141–02	11	42
1–110–162–06	17	16
1–110–164–03	17	22
1–110–165–02	17	21
1–110–173–03	17	10
1–110–175–03	17	12
1–110–181–10	17	38
1–110–197–01	18	29
1–110–211–01	17	3
1–110–214–01	18	21
1–110–215–01	18	20
1–110–216–01	18	18

CROSS-REFERENCE INDEXES

PART NUMBER INDEX

PART NUMBER	FIG.	ITEM	PART NUMBER	FIG.	ITEM
1–110–217–01	31	10	1–130–262–02	25	20
1–110–218–01	18	24	1–130–264–01	25	22
1–110–219–01	18	23	1–130–265–01	25	18
1–110–223–03	17	19	1–130–266–01	25	12
1–110–230–15	18	6	1–130–268–01	47	1
1–110–250–02	18	7	1–130–278–01	25	1
1–110–252–03	17	35	1–130–610–12	25	5
1–110–255–06	17	25	1–130–620–05	22	3
1–110–257–02	17	18	1–130–620–16	22	3
1–110–259–02	17	23	1–130–630–08	19	1
1–110–262–01	24	7	1–130–630–19	19	1
1–110–301–03	18	28	1–130–630–22	19	1
1–110–309–02	18	27	1–130–710–01	25	7
1–110–376–08	17	30	1–130–720–02	45	4
1–110–398–01	17	30	1–130–730–02	20	15
1–110–470–13	17	9	1–130–780–01	25	9
1–110–500–03	17	14	1–130–780–03	25	9
1–110–520–19	17	15	1–130–790–01	25	11
1–110–610–01	18	19	1–130–800–01	25	19
1–110–620–01	17	20	1–140–009–02	26	33
1–110–710–06	17	15	1–140–011–01	26	32
1–110–710–07	17	17	1–140–023–06	21	1
1–110–720–02	17	32	1–140–025–05	26	9
1–120–000–14	24	1	1–140–061–01	26	18
1–120–026–03	24	3	1–140–062–03	26	19
1–120–026–05	24	3	1–140–067–14	19	5
1–120–027–02	24	5	1–140–102–02	27	1
1–120–027–03	24	5	1–140–113–03	27	3
1–120–028–01	24	2	1–140–142–02	22	21
1–120–029–01	24	14	1–140–144–02	26	7
1–120–029–02	24	14	1–140–157–02	17	31
1–120–029–03	24	14		26	1
1–120–031–01	24	13	1–140–161–01	26	23
1–120–032–01	24	10	1–140–162–02	26	17
1–120–033–01	24	9	1–140–164–03	26	30
1–120–034–01	24	8	1–140–165–03	26	29
1–120–035–02	24	11	1–140–168–02	22	20
1–120–038–02	24	12	1–140–168–03	22	20
	24	12	1–140–169–04	22	9
1–120–039–09	24	4	1–140–176–02	27	2
1–120–040–03	24	2	1–140–182–01	19	10
1–120–050–03	24	1	1–140–189–02	26	16
1–130–018–02	25	6	1–140–190–05	26	14
1–130–218–03	25	1	1–140–191–02	26	22
1–130–235–01	25	3	1–140–192–02	26	21
1–130–236–03	20	14	1–140–217–01	19	4
1–130–245–01	22	16	1–140–217–02	19	4
	22	16	1–140–217–03	19	4
1–130–248–02	25	23	1–140–217–04	19	4
1–130–255–01	25	17	1–140–233–02	19	6
1–130–256–01	25	10	1–140–258–04	27	4
1–130–256–02	25	15	1–140–261–03	27	5
	25	15	1–140–268–01	26	11
1–130–257–01	25	16	1–140–271–01	26	37
1–130–258–02	25	14	1–140–272–04	26	3
1–130–259–02	25	13	1–140–273–03	26	5
1–130–261–01	25	21	1–140–274–02	26	6

CROSS-REFERENCE INDEXES

PART NUMBER INDEX

PART NUMBER	FIG.	ITEM	PART NUMBER	FIG.	ITEM
1–140–275–06	22	1	1–160–124–03	49	11
1–140–276–01	22	2	1–160–125–01	49	12
1–140–276–02	22	2	1–160–126–01	49	13
1–140–276–03	22	2	1–160–135–01	60	4
1–140–285–01	12	1	1–160–136–01	47	21
	23	12		55	11
	26	4		60	14
	28	1	1–160–178–01	49	14
1–140–303–01	22	2	1–160–220–03	49	10
1–140–303–02	22	2	1–160–244–01	7	5
1–140–303–03	22	2	1–160–245–01	7	9
1–140–470–05	22	8	1–160–253–01	3	15
1–140–530–14	22	5		7	10
1–140–550–07	26	2	1–160–254–01	7	15
1–140–590–09	26	28	1–160–258–02	55	15
1–140–640–03	19	8	1–160–265–01	7	8
1–140–660–02	26	35	1–160–268–02	10	29
1–140–670–02	26	25	1–160–272–01	7	14
1–150–005–02	20	7	1–160–299–02	3	3
1–150–006–01	20	41	1–160–304–01	3	4
1–150–007–02	21	2	1–160–306–01	46	12
1–150–042–03	20	28	1–160–309–01	51	25
1–150–059–01	19	12		57	13
1–150–077–03	21	6	1–160–322–01	47	8
1–150–086–01	21	8	1–160–341–01	10	30
1–150–107–03	20	11	1–160–342–01	10	28
1–150–108–01	20	10	1–160–343–01	7	3
1–150–116–03	20	25	1–160–362–03	47	14
1–150–117–03	20	30	1–160–403–01	37	37
1–150–119–01	20	36	1–160–404–01	37	36
1–150–122–01	20	35	1–160–410–05	37	39
1–150–123–02	20	37	1–160–411–01	36	1
1–150–126–01	55	7	1–160–414–02	37	35
1–150–220–02	21	7	1–160–415–01	37	38
1–150–230–09	21	5	1–160–416–02	37	34
1–150–240–06	20	6	1–160–417–01	37	11
1–150–250–02	20	9	1–160–418–01	37	13
1–150–250–08	20	9	1–160–418–02	37	33
1–150–260–02	20	20	1–160–419–02	37	19
1–150–260–08	20	20	1–160–420–01	37	1
1–150–280–02	20	27	1–160–421–01	37	15
1–150–280–03	20	38	1–160–422–02	37	45
1–150–280–04	20	22	1–160–423–02	37	47
1–150–280–05	20	31	1–160–424–01	37	2
	20	31	1–160–425–01	37	6
	20	33	1–160–427–01	37	4
1–150–280–06	20	26	1–160–429–01	37	28
1–150–280–07	20	21		38	9
1–150–280–13	20	31	1–160–432–02	38	1
1–150–360–02	20	23	1–160–439–01	37	14
1–150–400–02	20	42	1–160–441–01	37	29
1–150–410–02	20	32	1–160–442–06	38	6
1–160–033–01	3	18	1–160–443–01	37	46
1–160–040–03	51	16	1–160–444–01	51	23
1–160–045–01	49	16	1–160–446–03	51	18
1–160–047–02	3	11	1–160–448–01	37	16
1–160–051–03	21	3	1–160–450–01	37	26

CROSS-REFERENCE INDEXES

PART NUMBER INDEX

PART NUMBER	FIG.	ITEM
1–160–451–01	37	18
1–160–452–01	37	5
1–160–454–01	51	21
1–160–457–02	57	14
1–160–464–01	51	27
1–160–468–01	31	13
	51	4
	57	4
	60	13
1–160–469–01	60	9
1–160–480–01	37	32
1–160–482–02	61	7
1–160–490–01	37	9
1–160–500–04	36	4
1–160–509–03	55	17
1–160–510–05	38	5
1–160–560–01	60	7
1–160–566–01	36	5
1–160–589–02	51	22
1–160–591–07	10	24
1–160–592–03	10	7
1–160–593–01	10	8
1–160–596–03	10	13
1–160–597–01	10	20
1–160–605–01	10	18
1–160–607–01	51	32
	57	15
1–160–607–02	4	6
1–160–617–02	10	12
1–160–619–01	3	20
1–160–622–01	55	12
1–160–623–01	55	2
1–160–624–01	47	28
1–160–625–01	46	5
1–160–626–01	46	8
1–160–635–01	19	11
1–160–760–04	10	1
1–160–820–04	7	4
1–160–850–16	51	10
1–160–870–02	55	16
1–160–890–01	49	1
1–160–920–01	7	16
1–170–050–12	7	18
1–170–120–01	51	17
1–170–410–02	60	16
1–170–420–01	47	11
1–170–430–01	47	7
1–170–490–02	47	31
1–170–500–01	47	3
1–170–710–02	3	1
1–180–004–01	10	11
1–180–017–01	10	9
1–180–049–01	10	6
1–180–101–01	5	6
1–180–103–03	5	2
1–180–104–01	5	3
1–180–105–02	5	22
1–180–106–01	5	7
1–180–107–01	5	15
1–180–108–01	5	13
1–180–109–02	5	5
1–180–111–01	5	17
1–180–114–01	5	18
1–180–115–01	50	6
1–180–119–03	50	14
1–180–121–01	50	18
1–180–122–03	50	2
1–180–125–01	50	17
1–180–126–01	50	3
1–180–127–02	50	12
1–180–128–01	50	11
1–180–131–01	49	8
1–180–134–01	50	16
1–180–135–01	5	4
1–180–150–01	4	7
1–180–160–01	4	16
1–180–170–01	50	9
1–180–180–01	50	10
1–180–190–03	49	9
1–180–200–01	50	15
1–180–210–01	4	5
1–190–007–07	28	3
1–190–008–04	28	4
1–190–009–05	28	2
1–190–010–03	22	10
1–190–014–02	29	4
	30	1
1–190–015–02	29	6
	30	3
1–190–016–01	22	11
1–190–019–02	22	18
1–190–019–03	22	15
	22	15
1–190–021–01	22	7
1–190–021–02	22	7
1–190–021–03	22	7
1–190–021–04	22	7
1–190–032–03	29	7
	30	4
1–190–033–01	29	5
	30	2
1–190–036–02	22	14
1–190–037–01	29	2
1–190–050–06	22	19
	29	3
1–190–050–07	22	19
1–300–002–02	32	9
1–300–004–01	33	17
	37	12
1–300–006–01	32	5
1–300–012–01	33	27
1–300–015–04	6	27
	11	5
	26	26

CROSS-REFERENCE INDEXES

PART NUMBER INDEX

PART NUMBER	FIG.	ITEM
1–300–047–01	6	15
1–300–054–01	60	15
1–300–077–01	6	31
	11	1
1–300–082–03	42	14
1–300–086–01	21	9
1–300–116–01	15	25
1–300–121–01	60	1
1–300–124–01	55	9
1–300–134–01	60	10
1–300–135–01	51	5
1–300–136–02	46	1
1–300–137–01	46	11
1–300–138–01	2	3
1–300–139–01	47	18
1–300–141–01	47	17
1–300–142	47	16
1–300–143–01	47	23
1–300–144–01	46	2
1–300–151–01	20	40
1–300–167–01	50	5
1–300–173–02	17	1
1–300–177–02	57	6
1–300–178–01	57	8
1–300–182–01	3	19
1–300–191–05	49	4
1–300–194–04	3	12
1–300–202–02	2	5
1–300–212–04	61	16
1–300–221–03	61	3
1–300–225–01	60	6
1–300–231–01	32	20
1–300–232–02	32	25
1–300–233–02	33	6
1–300–234–02	32	10
1–300–235–02	37	23
1–300–237–01	10	27
1–300–239–01	20	1
1–300–242–02	57	3
1–300–243–01	31	25
1–300–244–02	47	24
1–300–249–01	17	6
1–300–267–01	37	30
1–300–268–02	11	13
	11	21
	14	4
	14	12
1–300–315–01	17	37
1–300–316–01	26	10
1–300–326–01	42	5
1–300–334–04	40	4
	41	4
1–300–336–01	26	12
1–300–338–01	40A	24
	41A	22
1–300–339–01	5	1
1–300–341–01	4	13

PART NUMBER	FIG.	ITEM
1–300–344–01	5	16
1–300–345–01	15	11
1–300–346–01	5	8
1–300–347–03	45	1
1–300–348–01	55	8
1–300–354–01	5	10
1–300–355–03	5	12
1–300–358–01	17	4
1–300–359–01	17	33
1–300–361–02	45	6
1–300–362–02	45	7
1–300–363–01	55	19
1–300–366–01	45	3
1–300–368–01	51	14
1–300–371–01	45	5
1–300–377–01	60	11
1–300–398–01	47	32
1–300–403–01	47	4
1–300–405–01	47	13
1–300–425–01	38	3
1–300–462–01	19	7
	22	6
	26	15
1–300–487–01	24	6
1–300–563–AV	22	12
1–300–582–01	10	10
1–300–585	6	14
1–300–588–01	6	26
	11	6
1–300–599–01	57	6
1–300–616–01	17	34
1–300–637–01	15	17
1–300–658–01	43	19
1–300–661–01	62	15
1–300–665–01	11	34
	17	5
	26	34
1–300–666–01	40A	19
	41A	17
1–300–667–01	40A	17
	41A	15
1–300–669–01	40	11
	41	11
1–300–672–01	43	6
1–300–682–01	40A	23
	41A	21
10–0833–00	111	6
10–166519	56	8
10–166711	56	7
10–166716	56	6
10–166723–3	56	3
10–166724–6	56	5
10–319253	56	2
100770A4	51	11
103100–A2	51	10
106500A1	51	11
106500A2	51	11

CROSS-REFERENCE INDEXES

PART NUMBER INDEX

PART NUMBER	FIG.	ITEM
11–4700–02	111	7
11–4737	74	21
11–4739	74	22
11–4740	74	9
11–6021	74	10
11–6085	74	6
11–6086	74	3
11–6105	74	8
11–6277	74	4
11–6527	74	2
11–6530	74	1
11168–06	2	7
	47	20
	55	3
12286994–3	17	29
12302369	15	30
1478	59	17
163339	56	4
16464–4	63	17
1840–4017	62	5
19511	59	16
19758	59	20
19759	59	19
19763	59	18
19765	59	7
19768	59	10
19769	59	4
19771	59	11
19772	59	12
19773	59	14
19775	59	2
19776	59	1
19817	59	8
19818	59	9
19865	59	5
19869	59	13
2–026–N602–70	53	27
2–160–267–01	10	14
2–161–055–01	4	12
	15	10
2–300–361–01	10	15
2–300–933–01	33	7
2–300–941–01	33	1
	37	44
	43	26
201B5–887	20	4
20404	59	15
214S5–82	20	3
21506	59	3
23932	54	11
23939	54	12
24150	54	14
25716061	58	14
25716068	58	4
25816570	58	10
25816571	58	13
25816572	58	9
25816578	58	8
25820153	58	2
25916207	58	11
25926062	58	12
26326083	58	16
26326084	58	5
26330053	3	12
2642594	48	2
26524166	58	7
2671175	48	3
2671179	48	9
2671180	48	1
2671181	48	5
2671182	48	7
2671183	48	6
2671217	48	4
2672441	48	8
28876	53	25
28970–6	53	21
28985–4	52	1
29670	61	14A
3040–4001	62	11
328419	58	3
41G153	111	8
416936–52	38	7
43607	54	15
43725	53	12
43825	54	6
440510	20	16
46270	53	18
46271	53	22
46286	53	16
4630–4000	62	12
48662	53	26
4920T53–002	112	1
5320–4001	62	14
5340A01–003	53	36
5830–4007	62	13
599–130–3	112	2
599–140–3	112	2
6085D14	20	5
70791	54	18
70946	54	22
70970	54	29
74874	54	24
74979	54	25
75151	54	13
75154	54	10
75157	54	9
75242	54	4
75804	53	20
76081	54	5
76672	53	1
76721	53	15
76722	53	17
7727030–03	31	17
77381	53	37

CROSS-REFERENCE INDEXES

PART NUMBER INDEX

PART NUMBER	FIG.	ITEM	PART NUMBER	FIG.	ITEM
77382	52	5	79296	53	8
77970	53	7	85938	53	28
78405	54	2	86014	53	38
78989	54	28	86239	53	29
79165	53	5	86528	53	31
79246	54	23	86529	53	30
79247	54	26	90488	53	32
79288	53	6	91620	54	8
79293	53	9	9382–4022	62	1

By Order of the Secretary of the Army:

DENNIS J. REIMER
General, United States Army
Chief of Staff

Official:

JOEL B. HUDSON
Acting Administrative Assistant to the
Secretary of the Army
00731

DISTRIBUTION:
To be distributed in accordance with DA Form 12-31-E, block no. 3503, requirements for TM 1-2840-260-23.

*U.S. GOVERNMENT PRINTING OFFICE: 1995-655-121/20318

ELECTRONIC DA FORM 2028 INSTRUCTIONS

The following format must be used if submitting an electronic 2028. The subject line must be exactly the same and all fields must be included: however, only the following fields are mandatory: 1, 3, 4, 5, 6, 7, 8, 9, 10, 13, 15, 16, 17, and 27.

From: "Whomever" <whomever@avma27.army.mil>
To: Is-lp@redstone.army.mil
Subject: DA Form 2028

1. **From:** Joe Smith
2. Unit: home
3. **Address:** 4300 Park
4. **City:** Hometown
5. **St:** AL
6. **Zip:** 77777
7. **Date Sent:** 19-OCT-93
8. **Pub No:** 55-2840-229-23
9. **Pub Title:** TM
10. **Publication Date:** 04-JUL-85
11. Change Number: 7
12. Submitter Rank: MSG
13. **Submitter Fname:** Joe
14. Submitter Mname: T
15. **Submitter Lname:** Smith
16. **Submitter Phone:** 123-123-1234
17. **Problem:** 1
18. Page: 2
19. Paragraph: 3
20. Line: 4
21. NSN: 5
22. Reference: 6
23. Figure: 7
24. Table: 8
25. Item: 9
26. Total: 123
27. **Text:**

This is the text for the problem below line 27.

RECOMMENDED CHANGES TO EQUIPMENT TECHNICAL PUBLICATIONS

THEN . . JOT DOWN THE DOPE ABOUT IT ON THIS FORM. CAREFULLY TEAR IT OUT. FOLD IT AND DROP IT IN THE MAIL!

SOMETHING WRONG WITH THIS PUBLICATION?

FROM (PRINT YOUR UNIT'S COMPLETE ADDRESS)

DATE SENT

PUBLICATION NUMBER	PUBLICATION DATE	PUBLICATION TITLE

BE EXACT PIN-POINT WHERE IT IS

PAGE NO	PARA-GRAPH	FIGURE NO	TABLE NO

IN THIS SPACE TELL WHAT IS WRONG AND WHAT SHOULD BE DONE ABOUT IT:

PRINTED NAME GRADE OR TITLE AND TELEPHONE NUMBER	SIGN HERE

DA FORM 1 JUL 79 2028-2

PREVIOUS EDITIONS ARE OBSOLETE.

PS. . IF YOUR OUTFIT WANTS TO KNOW ABOUT YOUR RECOMMENDATION MAKE A CARBON COPY OF THIS AND GIVE IT TO YOUR HEADQUARTERS

REVERSE OF DA FORM 2028-2

FILL IN YOUR UNIT'S ADDRESS

FOLD BACK

DEPARTMENT OF THE ARMY

TEAR ALONG PERFORATED LINE

COMMANDER
US ARMY AVIATION AND MISSILE COMMAND
ATTN AMSAM-MMC-LS-LP
REDSTONE ARSENAL AL 35898-5230

RECOMMENDED CHANGES TO EQUIPMENT TECHNICAL PUBLICATIONS

THEN . . JOT DOWN THE DOPE ABOUT IT ON THIS FORM. CAREFULLY TEAR IT OUT. FOLD IT AND DROP IT IN THE MAIL!

SOMETHING WRONG WITH THIS PUBLICATION?

FROM (PRINT YOUR UNIT'S COMPLETE ADDRESS)

DATE SENT

PUBLICATION NUMBER	PUBLICATION DATE	PUBLICATION TITLE

BE EXACT PIN-POINT WHERE IT IS

PAGE NO	PARA-GRAPH	FIGURE NO	TABLE NO

IN THIS SPACE TELL WHAT IS WRONG AND WHAT SHOULD BE DONE ABOUT IT:

PRINTED NAME GRADE OR TITLE AND TELEPHONE NUMBER

SIGN HERE

DA FORM 1 JUL 79 2028-2

PREVIOUS EDITIONS ARE OBSOLETE.

PS. . IF YOUR OUTFIT WANTS TO KNOW ABOUT YOUR RECOMMENDATION MAKE A CARBON COPY OF THIS AND GIVE IT TO YOUR HEADQUARTERS

REVERSE OF DA FORM 2028-2

FILL IN YOUR UNIT'S ADDRESS

FOLD BACK

DEPARTMENT OF THE ARMY

TEAR ALONG PERFORATED LINE

COMMANDER
US ARMY AVIATION AND MISSILE COMMAND
ATTN AMSAM-MMC-LS-LP
REDSTONE ARSENAL AL 35898-5230

RECOMMENDED CHANGES TO EQUIPMENT TECHNICAL PUBLICATIONS

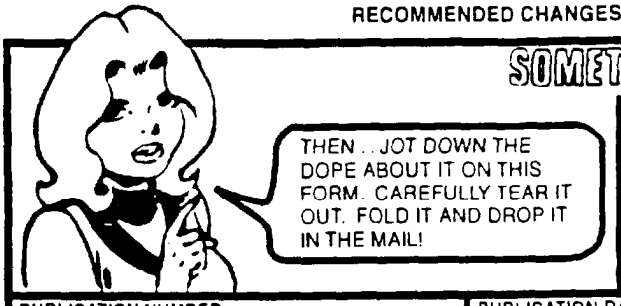

SOMETHING WRONG WITH THIS PUBLICATION?

FROM (PRINT YOUR UNIT'S COMPLETE ADDRESS)

DATE SENT

PUBLICATION NUMBER	PUBLICATION DATE	PUBLICATION TITLE

BE EXACT PIN-POINT WHERE IT IS				IN THIS SPACE TELL WHAT IS WRONG AND WHAT SHOULD BE DONE ABOUT IT:
PAGE NO	PARA-GRAPH	FIGURE NO	TABLE NO	

PRINTED NAME GRADE OR TITLE AND TELEPHONE NUMBER	SIGN HERE

DA FORM 1 JUL 79 2028-2

PREVIOUS EDITIONS ARE OBSOLETE.

PS. . IF YOUR OUTFIT WANTS TO KNOW ABOUT YOUR RECOMMENDATION MAKE A CARBON COPY OF THIS AND GIVE IT TO YOUR HEADQUARTERS

REVERSE OF DA FORM 2028-2

FILL IN YOUR UNIT'S ADDRESS

FOLD BACK

DEPARTMENT OF THE ARMY

TEAR ALONG PERFORATED LINE

COMMANDER
US ARMY AVIATION AND MISSILE COMMAND
ATTN AMSAM-MMC-LS-LP
REDSTONE ARSENAL AL 35898-5230

RECOMMENDED CHANGES TO EQUIPMENT TECHNICAL PUBLICATIONS

THEN . . JOT DOWN THE DOPE ABOUT IT ON THIS FORM. CAREFULLY TEAR IT OUT. FOLD IT AND DROP IT IN THE MAIL!

SOMETHING WRONG WITH THIS PUBLICATION?

FROM (PRINT YOUR UNIT'S COMPLETE ADDRESS)

DATE SENT

PUBLICATION NUMBER	PUBLICATION DATE	PUBLICATION TITLE

BE EXACT PIN-POINT WHERE IT IS

PAGE NO	PARA-GRAPH	FIGURE NO	TABLE NO

IN THIS SPACE TELL WHAT IS WRONG AND WHAT SHOULD BE DONE ABOUT IT:

PRINTED NAME GRADE OR TITLE AND TELEPHONE NUMBER

SIGN HERE

DA FORM 1 JUL 79 2028-2

PREVIOUS EDITIONS ARE OBSOLETE.

PS. . IF YOUR OUTFIT WANTS TO KNOW ABOUT YOUR RECOMMENDATION MAKE A CARBON COPY OF THIS AND GIVE IT TO YOUR HEADQUARTERS

REVERSE OF DA FORM 2028-2

FILL IN YOUR UNIT'S ADDRESS

FOLD BACK

DEPARTMENT OF THE ARMY

TEAR ALONG PERFORATED LINE

COMMANDER
US ARMY AVIATION AND MISSILE COMMAND
ATTN AMSAM-MMC-LS-LP
REDSTONE ARSENAL AL 35898-5230

The Metric System and Equivalents

Linear Measure

1 centimeter = 10 millimeters = .39 inch
1 decimeter = 10 centimeters = 3.94 inches
1 meter = 10 decimeters = 39.37 inches
1 dekameter = 10 meters = 32.8 feet
1 hectometer = 10 dekameters = 328.08 feet
1 kilometer = 10 hectometers = 3,280.8 feet

Weights

1 centigram = 10 milligrams = .15 grain
1 decigram = 10 centigrams = 1.54 grains
1 gram = 10 decigram = .035 ounce
1 dekagram = 10 grams = .35 ounce
1 hectogram = 10 dekagrams = 3.52 ounces
1 kilogram = 10 hectograms = 2.2 pounds
1 quintal = 100 kilograms = 220.46 pounds
1 metric ton = 10 quintals = 1.1 short tons

Liquid Measure

1 centiliter = 10 milliters = .34 fl. ounce
1 deciliter = 10 centiliters = 3.38 fl. ounces
1 liter = 10 deciliters = 33.81 fl. ounces
1 dekaliter = 10 liters = 2.64 gallons
1 hectoliter = 10 dekaliters = 26.42 gallons
1 kiloliter = 10 hectoliters = 264.18 gallons

Square Measure

1 sq. centimeter = 100 sq. millimeters = .155 sq. inch
1 sq. decimeter = 100 sq. centimeters = 15.5 sq. inches
1 sq. meter (centare) = 100 sq. decimeters = 10.76 sq. feet
1 sq. dekameter (are) = 100 sq. meters = 1,076.4 sq. feet
1 sq. hectometer (hectare) = 100 sq. dekameters = 2.47 acres
1 sq. kilometer = 100 sq. hectometers = .386 sq. mile

Cubic Measure

1 cu. centimeter = 1000 cu. millimeters = .06 cu. inch
1 cu. decimeter = 1000 cu. centimeters = 61.02 cu. inches
1 cu. meter = 1000 cu. decimeters = 35.31 cu. feet

Approximate Conversion Factors

To change	*To*	*Multiply by*	*To change*	*To*	*Multiply by*
inches	centimeters	2.540	ounce-inches	newton-meters	.007062
feet	meters	.305	centimeters	inches	.394
yards	meters	.914	meters	feet	3.280
miles	kilometers	1.609	meters	yards	1.094
square inches	square centimeters	6.451	kilometers	miles	.621
square feet	square meters	.093	square centimeters	square inches	.155
square yards	square meters	.836	square meters	square feet	10.764
square miles	square kilometers	2.590	square meters	square yards	1.196
acres	square hectometers	.405	square kilometers	square miles	.386
cubic feet	cubic meters	.028	square hectometers	acres	2.471
cubic yards	cubic meters	.765	cubic meters	cubic feet	35.315
fluid ounces	milliliters	29,573	cubic meters	cubic yards	1.308
pints	liters	.473	milliliters	fluid ounces	.034
quarts	liters	.946	liters	pints	2.113
gallons	liters	3.785	liters	quarts	1.057
ounces	grams	28.349	liters	gallons	.264
pounds	kilograms	.454	grams	ounces	.035
short tons	metric tons	.907	kilograms	pounds	2.205
pound-feet	newton-meters	1.356	metric tons	short tons	1.102
pound-inches	newton-meters	.11296			

Temperature (Exact)

°F	Fahrenheit temperature	5/9 (after subtracting 32)	Celsius temperature	°C

PIN: 074102-005